AccuCrete

AccuCrete® Primer/Sealer 8818

AccuCrete® Primer/Sealer 8818 is an acrylic emulsion used as a primer and sealer for the AccuCrete® product line. AccuCrete® Primer/Sealer 8818 is available through our certified AccuCrete® installers throughout the United States and Canada. This product is used as both a bonding agent and also a surface sealer prior to the installation of finished flooring. Depending on the finished flooring AccuCrete® may not need to be sealed.

When to Install:
AccuCrete® Primer/Sealer 8818 when used as a primer/bonding agent is installed over a clean structurally sound subfloor that is free of all contaminants that may inhibit bond. The primer should be applied prior to installation of an AccuCrete®/AccuLevel® underlayment. Open time before the installation of the AccuCrete® underlayment is 12 hours and after 12 hours a light coat of AccuCrete® Primer/Sealer 8818 should be applied to ensure proper bond.

AccuCrete® Primer/Sealer 8818 when used as a sealer is typically installed by the flooring contractor a minimum of 2 to 12 hours prior to the installation of the finished flooring. It is important that the AccuCrete® Primer/Sealer 8818 is dry to the touch with no transfer before beginning the flooring installation. Note: It is always best when possible to wait 12 hours prior to the installation of the finished flooring. In all cases, the floor covering system manufacturer's recommendations supersede these recommendations.

Installation:
When used as a primer/bonding agent, AccuCrete® Primer/Sealer 8818 is mixed at a 3:1 ratio with water and applied at a rate of 300 sq. ft. per gallon. It is applied directly to the clean subfloor using a sprayer, roller, or broom onto the surface. In some cases, multiple coats of primer may be necessary to effectively seal the substrate. When multiple coats are applied, do not allow the initial coat to fully dry prior to application of a second coat. Once the first coat dries, a film will form on the surface that prevents additional coats from penetrating into the surface.

When used as a surface sealer, AccuCrete® Primer/Sealer 8818 is mixed at a 4:1 ratio with water and applied at a rate of 300 sq. ft. per gallon. It is applied directly to the clean gypsum floor using a sprayer, roller, or broom onto the surface. In some cases, multiple coats of sealer may be necessary to effectively seal the AccuCrete® surface. When multiple coats are applied, do not allow the initial coat to fully dry prior to application of a second coat. Once the first coat dries, a film will form on the surface that prevents additional coats from penetrating into the surface. Allow the sealer to fully dry prior to the installation of floor goods. Bond tests performed by the finished flooring contractor are recommended prior to proceeding with full installation of floor goods.

Storage:
AccuCrete® Primer/Sealer 8818 is provided in 55 gallon drums. These should be kept from freezing and stored at room temperature prior to installation. Any unused non-toxic sealer can be discarded in conjunction with local agencies.

LEED/VOC
EQ 4.1 Indoor Air Quality: All bonding primers and surface sealers listed are approved for use in conjunction with AccuCrete® meet VOC critical specified for Sealers and Adhesives in this section. Its VOC Content (g/L) is .628 g/L.

AccuCrete LIMITED WARRANTY:

Notice: Arcosa Specialty Materials warrants that the AccuCrete® and AccuLevel® products will conform to the written specifications stated by Arcosa Specialty Materials at the time of its shipment by Arcosa Specialty Materials . Arcosa Specialty Materials liability is limited to replacement of defective material, F.O.B./factory. Customers must promptly notify Arcosa Specialty Materials of any alleged defects. Replacement of defective material will be made only upon Arcosa Specialty Materials inspection of the material Because Arcosa Specialty does not install AccuCrete® or AccuLevel®, it cannot be held responsible for the results of any installation. CUSTOMER DISCLAIMS AND Arcosa Specialty MAKES NO WARRANTIES, INCLUDING THE IMPLIED WARRANTIES OF MERCHANTABILITY AND FITNESS FOR A PARTICULAR PURPOSE. CUSTOMER WAIVES AND Arcosa Specialty Materials SHALL NOT BE LIABLE FOR ANY INCIDENTAL OR CONSEQUENTIAL DAMAGES UNDER ANY THEORY OF LAW. NO REPRESENTATIVE OF Arcosa Specialty Materials HAS THE AUTHORITY TO MAKE ANY REPRESENTATIONS OR PROMISES OF Arcosa Specialty Materials EXCEPT AS STATED HEREIN. IN NO EVENT WILL ASM'S LIABILITY HERUNDER EXCEED THE PURCHASE PRICE OF THE DEFECTIVE MATERIAL.

SDS available upon request from Arcosa Specialty Materials AccuCrete®, AccuRadiant®, AccuLevel® and AccuQuiet® are registered trademarks of Arcosa Specialty Materials.

ARCOSA
SPECIALTY MATERIALS
1550 Double Drive
Norman, OK 73069 T
oll free: 800-624-5963
www.ArcosaSpecialtyMaterials.com

SAFETY DATA SHEET

FOR INDUSTRIAL USE ONLY

AXILAT(TM) L8818 55G OHP PS03 450LB

Section 1. Product and company identification

GHS product identifier	:	AXILAT(TM) L8818 55G OHP PS03 450LB
MSDS Number	:	300000018436
Product type	:	Adhesive
Material uses	:	Industrial use.

Manufacturer/Supplier/Importer	:	Synthomer USA LLC 200 Railroad Street Roebuck, South Carolina 29376 USA
Contact person	:	sds@synthomer.com
Telephone	:	For additional health and safety or regulatory information, call 1 800 476 4476
Emergency telephone number	:	+1 866 928 0789 +1 215 207 0061

Section 2. Hazards identification

Classification of the substance or mixture	:	Not classified.

GHS label elements

Signal word	:	No signal word.
Hazard statements	:	No known significant effects or critical hazards.

Precautionary statements

General	:	Not applicable.
Prevention	:	Not applicable.
Response	:	Not applicable.
Storage	:	Not applicable.
Disposal	:	Not applicable.

Other hazards which do not result in classification	:	None known.

Section 3. Composition/information on ingredients

Substance/mixture : Mixture

There are no ingredients present which, within the current knowledge of the supplier and in the concentrations applicable, are classified as hazardous to health or the environment, are PBTs, vPvBs or Substances of equivalent concern, or have been assigned a workplace exposure limit and hence require reporting in this section.
Occupational exposure limits, if available, are listed in Section 8.

Section 4. First aid measures

Description of necessary first aid measures

Eye contact : Immediately flush eyes with plenty of water, occasionally lifting the upper and lower eyelids. Check for and remove any contact lenses. Get medical attention if irritation occurs.

Inhalation : Remove victim to fresh air and keep at rest in a position comfortable for breathing. Get medical attention if symptoms occur.

Skin contact : Flush contaminated skin with plenty of water. Remove contaminated clothing and shoes. Get medical attention if symptoms occur.

Ingestion : Wash out mouth with water. Remove victim to fresh air and keep at rest in a position comfortable for breathing. If material has been swallowed and the exposed person is conscious, give small quantities of water to drink. Do not induce vomiting unless directed to do so by medical personnel. Get medical attention if symptoms occur.

Indication of immediate medical attention and special treatment needed, if necessary

Notes to physician : Treat symptomatically. Contact poison treatment specialist immediately if large quantities have been ingested or inhaled.

Specific treatments : No specific treatment.

Protection of first aid personnel : No action shall be taken involving any personal risk or without suitable training.

See toxicological information (Section 11)

Section 5. Fire-fighting measures

Extinguishing media

Suitable extinguishing media : Use an extinguishing agent suitable for the surrounding fire.

Unsuitable extinguishing media : None known.

Specific hazards arising from the chemical : In a fire or if heated, a pressure increase will occur and the container may burst.

Hazardous thermal decomposition products : No specific data.

Special protective actions for fire-fighters : Promptly isolate the scene by removing all persons from the vicinity of the incident if there is a fire. No action shall be taken involving any personal risk or without suitable training.

Special protective equipment for fire-fighters : Fire-fighters should wear appropriate protective equipment and self-contained breathing apparatus (SCBA) with a full face-piece operated in positive pressure mode.

Section 6. Accidental release measures

Personal precautions, protective equipment and emergency procedures

For non-emergency personnel : No action shall be taken involving any personal risk or without suitable training. Evacuate surrounding areas. Keep unnecessary and unprotected personnel from entering. Do not touch or walk through spilled material. Put on appropriate personal protective equipment.

For emergency responders : If specialised clothing is required to deal with the spillage, take note of any information in Section 8 on suitable and unsuitable materials. See also the information in "For non-emergency personnel".

Environmental precautions : Avoid dispersal of spilled material and runoff and contact with soil, waterways, drains and sewers. Inform the relevant authorities if the product has caused environmental pollution (sewers, waterways, soil or air).

Methods and material for containment and cleaning up

Small spill : Stop leak if without risk. Move containers from spill area. Dilute with water and mop up if water-soluble. Alternatively, or if water-insoluble, absorb with an inert dry material and place in an appropriate waste disposal container. Dispose of via a licensed waste disposal contractor.

Large spill : Stop leak if without risk. Move containers from spill area. Prevent entry into sewers, water courses, basements or confined areas. Wash spillages into an effluent treatment plant or proceed as follows. Contain and collect spillage with non-combustible, absorbent material e.g. sand, earth, vermiculite or diatomaceous earth and place in container for disposal according to local regulations (see section 13 of SDS). Dispose of via a licensed waste disposal contractor. Note: see section 1 of SDS for emergency contact information and section 13 of SDS for waste disposal.

Section 7. Handling and storage

Precautions for safe handling

Protective measures : Put on appropriate personal protective equipment (see section 8 of SDS).

Advice on general occupational hygiene : Eating, drinking and smoking should be prohibited in areas where this material is handled, stored and processed. Workers should wash hands and face before eating, drinking and smoking. Remove contaminated clothing and protective equipment before entering eating areas. See also Section 8 for additional information on hygiene measures.

Conditions for safe storage, including any incompatibilities : Store in accordance with local regulations. Store in original container protected from direct sunlight in a dry, cool and well-ventilated area, away from incompatible materials (see section 10 of SDS) and food and drink. Keep container tightly closed and sealed until ready for use. Containers that have been opened must be carefully resealed and kept

upright to prevent leakage. Do not store in unlabeled containers. Use appropriate containment to avoid environmental contamination.

Section 8. Exposure controls/personal protection

Control parameters

Occupational exposure limits

None.

Recommended monitoring procedures : If this product contains ingredients with exposure limits, personal, workplace atmosphere or biological monitoring may be required to determine the effectiveness of the ventilation or other control measures and/or the necessity to use respiratory protective equipment.

Appropriate engineering controls : No special ventilation requirements. Good general ventilation should be sufficient to control worker exposure to airborne contaminants. If this product contains ingredients with exposure limits, use process enclosures, local exhaust ventilation or other engineering controls to keep worker exposure below any recommended or statutory limits.

Environmental exposure controls : Emissions from ventilation or work process equipment should be checked to ensure they comply with the requirements of environmental protection legislation. In some cases, fume scrubbers, filters or engineering modifications to the process equipment will be necessary to reduce emissions to acceptable levels.

Individual protection measures

Hygiene measures : Wash hands, forearms and face thoroughly after handling chemical products, before eating, smoking and using the lavatory and at the end of the working period. Appropriate techniques should be used to remove potentially contaminated clothing. Wash contaminated clothing before reusing. Ensure that eyewash stations and safety showers are close to the workstation location.

Eye/face protection : Safety eyewear complying with an approved standard should be used when a risk assessment indicates this is necessary to avoid exposure to liquid splashes, mists, gases or dusts. If contact is possible, the following protection should be worn, unless the assessment indicates a higher degree of protection: safety glasses with side-shields.

Skin protection

Hand protection : Chemical-resistant, impervious gloves complying with an approved standard should be worn at all times when handling chemical products if a risk assessment indicates this is necessary.

Body protection : Personal protective equipment for the body should be selected based on the task being performed and the risks involved and should be approved by a specialist before handling this product.

Other skin protection : Appropriate footwear and any additional skin protection measures should be selected based on the task being performed and the risks involved and should be approved by a specialist before handling this product.

Respiratory protection : Use a properly fitted, air-purifying or air-fed respirator complying with an approved standard if a risk assessment indicates this is necessary. Respirator selection must be based on known or anticipated exposure

levels, the hazards of the product and the safe working limits of the selected respirator.

Section 9. Physical and chemical properties

Appearance

Physical state	:	Liquid
Color	:	White
Odor	:	Acrylate
Odor threshold	:	Not available
pH	:	Not available
Melting point/ Freezing point	:	Not available
Boiling point	:	100 °C (212 °F)
Flash point	:	Greater than 100 °C (212 °F)
Burning time	:	Not available
Burning rate	:	Not available
Evaporation rate	:	Not available
Flammability (solid, gas)	:	Not available
Lower and upper explosive (flammable) limits	:	**Lower:** Not available **Upper:** Not available
Vapor pressure	:	Not available
Vapor density	:	Not available
Relative density	:	1.01 - 1.03
Solubility	:	Not available
Solubility in water	:	Dispersible
Partition coefficient: n-octanol/water	:	Not available
Auto-ignition temperature	:	Not available
Decomposition temperature	:	Not available
SADT	:	Not available
Viscosity	:	**Dynamic:** 30 - 300 mPa·s **Kinematic:** Not available

Other information

No additional information.

Section 10. Stability and reactivity

Reactivity	:	Stable under normal conditions.

Chemical stability : The product is stable.

Possibility of hazardous reactions : Under normal conditions of storage and use, hazardous reactions will not occur.

Conditions to avoid : Strong oxidizer,

Incompatible materials : No specific data.

Hazardous decomposition products : Under normal conditions of storage and use, hazardous decomposition products should not be produced.

Section 11. Toxicological information

Information on toxicological effects

Acute toxicity

Conclusion/Summary : Not available

Irritation/Corrosion

Conclusion/Summary
Skin : Not available
eyes : Not available
Respiratory : Not available

Sensitization

Conclusion/Summary
Skin : Not available
Respiratory : Not available

Mutagenicity

Conclusion/Summary : Not available

Carcinogenicity

Conclusion/Summary : Not available

Reproductive toxicity

Conclusion/Summary : Not available

Teratogenicity

Conclusion/Summary : Not available

Specific target organ toxicity (single exposure)
Not available

Specific target organ toxicity (repeated exposure)
Not available

Aspiration hazard

Not available

Information on the likely routes of exposure : Not available

Potential acute health effects

Eye contact	:	No known significant effects or critical hazards.
Inhalation	:	No known significant effects or critical hazards.
Skin contact	:	No known significant effects or critical hazards.
Ingestion	:	No known significant effects or critical hazards.

Symptoms related to the physical, chemical and toxicological characteristics

Eye contact	:	No specific data.
Inhalation	:	No specific data.
Skin contact	:	No specific data.
Ingestion	:	No specific data.

Delayed and immediate effects and also chronic effects from short and long term exposure

Short term exposure

Potential immediate effects	:	Not available
Potential delayed effects	:	Not available

Long term exposure

Potential immediate effects	:	Not available
Potential delayed effects	:	Not available

Potential chronic health effects

Conclusion/Summary : Not available

General	:	No known significant effects or critical hazards.
Carcinogenicity	:	No known significant effects or critical hazards.
Mutagenicity	:	No known significant effects or critical hazards.
Teratogenicity	:	No known significant effects or critical hazards.
Developmental effects	:	No known significant effects or critical hazards.
Fertility effects	:	No known significant effects or critical hazards.

Numerical measures of toxicity

Acute toxicity estimates

Not available

Section 12. Ecological information

Toxicity

Conclusion/Summary : Not available

Persistence/degradability

Conclusion/Summary : Not available

Mobility in soil

Soil/water partition coefficient (KOC) : Not available

Other adverse effects : No known significant effects or critical hazards.

Section 13. Disposal considerations

Disposal methods : The generation of waste should be avoided or minimized wherever possible. Disposal of this product, solutions and any by-products should at all times comply with the requirements of environmental protection and waste disposal legislation and any regional local authority requirements. Dispose of surplus and non-recyclable products via a licensed waste disposal contractor. Waste should not be disposed of untreated to the sewer unless fully compliant with the requirements of all authorities with jurisdiction. Waste packaging should be recycled. Incineration or landfill should only be considered when recycling is not feasible. This material and its container must be disposed of in a safe way. Empty containers or liners may retain some product residues. Avoid dispersal of spilled material and runoff and contact with soil, waterways, drains and sewers.

Section 14. Transport information

The data provided in this section is for information only and may not be specific to your package size or mode of transport. You will need to apply the appropriate regulations to properly classify your shipment for transportation.

International transport regulations

Regulatory information	UN/NA number	Proper shipping name	Classes/*PG	Reportable Quantity (RQ)
CFR		Non-regulated		
TDG		Non-regulated		
IMO/IMDG		Non-regulated		
IATA (Cargo)		Non-regulated		

*PG : Packing group

Special precautions for user : Transport within user's premises: always transport in closed containers that are upright and secure. Ensure that persons transporting the product know what to do in the event of an accident

or spillage.

Section 15. Regulatory information

United States

U.S. Federal regulations : **United States - TSCA 12(b) - Chemical export notification:** None required.
United States - TSCA 5(a)2 - Final significant new use rules: Not listed
United States - TSCA 5(a)2 - Proposed significant new use rules: Not listed
United States - TSCA 5(e) - Substances consent order: Not listed
SARA 311/312 Classification - Not applicable.

California Prop. 65: : None required.

United States inventory (TSCA 8b) : All components are listed or exempted.

Canada

WHMIS (Canada) : Not controlled under WHMIS (Canada).

Canadian lists

Canadian NPRI : None required.

CEPA Toxic substances : None required.

International regulations

International lists : **Australia inventory (AICS):** All components are listed or exempted.
Canada inventory: All components are listed or exempted.
Japan inventory: Not determined.
China inventory (IECSC): Not determined.
Korea inventory: All components are listed or exempted.
New Zealand Inventory (NZIoC): Not determined.
Philippines inventory (PICCS): Not determined.
United States inventory (TSCA 8b): All components are listed or exempted.
Taiwan inventory (CSNN): Not determined.

Section 16. Other information

Hazardous Material Information System III (U.S.A.) :

Health	-	1
Flammability		1
Physical hazards		0

Caution: HMIS® ratings are based on a 0-4 rating scale, with 0 representing minimal hazards or risks, and 4 representing significant hazards or risks Although HMIS® ratings are not required on MSDSs under 29 CFR

1910.1200, the preparer may choose to provide them. HMIS® ratings are to be used with a fully implemented HMIS® program. HMIS® is a registered mark of the National Paint & Coatings Association (NPCA). HMIS® materials may be purchased exclusively from J. J. Keller (800) 327-6868. The customer is responsible for determining the PPE code for this material.

Full text of abbreviated H statements	:	Not applicable.

History

Date of printing	:	03/21/2017
Date of issue/Date of revision	:	07/01/2016
Date of previous issue	:	07/30/2015
Version	:	1.1
Prepared by	:	Product Safety Stewardship
Key to abbreviations	:	ATE = Acute Toxicity Estimate BCF = Bioconcentration Factor GHS = Globally Harmonized System of Classification and Labelling of Chemicals IATA = International Air Transport Association IBC = Intermediate Bulk Container IMDG = International Maritime Dangerous Goods LogPow = logarithm of the octanol/water partition coefficient MARPOL 73/78 = International Convention for the Prevention of Pollution From Ships, 1973 as modified by the Protocol of 1978. ("Marpol" = marine pollution) RID = The Regulations concerning the International Carriage of Dangerous Goods by Rail UN = United Nations
References	:	Not available

Notice to reader

The information provided in this Safety Data Sheet is correct to the best of our knowledge, information and belief at the date of its publication. The information given is designed only as a guidance for safe handling, use, processing, storage, transportation, disposal and release and is not to be considered a warranty or quality specification. The information relates only to the specific material designated and may not be valid for such material used in combination with any other materials or in any process, unless specified in the text.

ARCOSA
SPECIALTY MATERIALS

SAFETY DATA SHEET

Section 1. Product Identification

Product identifier	AccuCrete®, AccuLevel®, AccuRadiant®
Other means of identification	
SDS number	ACG 2000
Additional Products	AccuLevel® G-40, AccuLevel® G-50, AccuLevel® H40, AccuLevel® G40 Pre-Sanded, AccuLevel® H40 Pre-Sanded, GSLK 2.6, M 3.4, AccuCrete® Prime, AccuCrete® NexGen, GSL RH, GSL CSD
Synonyms	Mixture of Plaster of Paris, Portland Cement and Limestone.
Recommended use	Flooring and Construction.
Recommended Restrictions	Use in accordance with manufacturer's recommendations.
Manufacturer/Importer/Supplier/Distributor information	
Company name	Arcosa Specialty Materials
Address	1550 Double Drive Norman, OK 73069
Telephone	1-800-624-5963
Website	www. ArcosaSpecialtyMaterials.com
Emergency phone number	1-800-624-5963

Section 2. Hazard(s) Identification

Emergency Overview	This product is not flammable, combustible, or explosive. It does not cause burns or severe skin or eye irritation. A single exposure will not result in serious adverse health effect. Prolonged contact with the product may result in abrasions or burns to the skin or irritation of the eyes. Prolonged inhalation of the dust may irritate the respiratory tract.
Physical hazards	Not classified.
Health Hazards	Not classified.
Acute:	
Eyes	Contact can cause mechanical irritation of eyes. If burning, redness, itching, pain or other symptoms persist or develop, consult physician. Eye irritation Category 2, subcategory 2B.
Skin	This material hardens and slowly becomes hot when mixed with water. Therefore, it SHOULD NOT be used to make a cast enclosing any part of the body. Failure to follow these instructions can cause burns that may require medical attention. Burns from exposure to Portland cement can occur 12 to 48 hours after exposures of 1 to 6 hours. Burns may occur without obvious pain at the time of exposure. Portland cement will not cause an alkaline burn by itself in dry form. However, direct prolonged or repeated contact with the skin may cause irritation. Rubbing of this product against the skin can result in abrasions. Rinse with water until free of material to avoid abrasions, and then wash skin thoroughly with mild soap and water. May dry skin. Mild Skin Irritation Category 2.
Inhalation	Inhalation of dusts from this product may irritate the nose, throat, lungs, and upper respiratory tract. Persons exposed to large amounts of this dust may be forced to leave area because of nuisance conditions such as coughing, sneezing, and nasal irritation. Labored breathing may occur after excessive inhalation. If respiratory symptoms persist, consult physician.
Ingestion	Harmful if swallowed. Plaster of Paris is non-toxic; however, ingestion of a sufficient quantity could lead to mechanical obstruction of the gut, especially the pyloric region. See Section 4.
Chronic:	Gypsum and Portland cement display no specific toxic properties.
Inhalation	Prolonged and repeated exposure to respirable crystalline silica can result in lung disease (i.e. silicosis) and lung cancer. Silicosis increases the risk of tuberculosis. Studies have shown various autoimmune and chronic kidney diseases in workers exposed to respirable crystalline silica. Some studies show and increased incidence of chronic bronchitis and emphysema in workers exposed to crystalline silica.
Skin	Dermatitis.
Ingestion	Burns to esophagus and stomach.

Environmental hazards Not Classified.
OSHA defined hazards Not Classified.

Label elements

Signal word Danger
Hazard statement Harmful if swallowed. Causes eye and skin irritation. May cause allergy or asthma symptoms or breathing difficulties if inhaled.

Precautionary statement

Prevention Wash hands thoroughly after handling,. Wear protective gloves. Avoid breathing dust. Wear respiratory protection. Do not eat, drink, or smoke when using this product. Contact lenses should not be worn while using Portland cement.

Response If eye irritation persists, if skin irritation occurs, or if experiencing respiratory symptoms: Get medical advice/attention. If swallowed: Call a doctor if you feel unwell.
Storage Store as indicated in Section 7.
Disposal Dispose of in accordance with local, state, and federal regulations.

Hazard(s) not otherwise classified (HNOC) None known.

Section 3. Composition/Information on Ingredients

Mixtures

Chemical name	CAS number	%
Calcium Sulfate Hemihydrate (Plaster of Paris)	26499-65-0	72-97
Portland Cement	65997-15-1	2-10
Silicon Dioxide (Crystalline Silica)	14808-60-7	<0.025
Calcium Carbonate	1317-65-3	0-15

Composition comments All concentrations are in percent by weight unless ingredient is a gas.

Section 4. First-Aid Measures

Eye contact If in eyes: Rinse cautiously with water for several minutes. Remove contact lenses, if present and easy to do. Continue rinsing. If eye irritation persists: Get medical advice/attention.

Skin contact If on skin: Wash with plenty of water/mild soap and water. Specific treatment: see supplemental first aid instruction on label. If skin irritation occurs: Get medical advice/attention. Take off contaminated clothing and wash it before reuse.

Inhalation If inhaled: If breathing is difficult, remove person to fresh air and keep comfortable for breathing. If experiencing respiratory symptoms: Call a doctor.

Ingestion If swallowed: Call a doctor if you feel unwell. Rinse mouth. Unlikely to occur, but may cause gastric disturbances if swallowed. Plaster of Paris is non-toxic; however, ingestion of a sufficient quantity could lead to mechanical obstruction of the gut, especially the pyloric region. Get medical attention immediately. Portland cement is highly alkaline (pH 12) and may cause burns to the esophagus and stomach. The use of diluents is controversial and neutralization is contraindicated.

Target Organs: Eyes, skin and respiratory system.

Medical Conditions which may be aggravated Pre-existing upper respiratory and lung diseases such as, but not limited to, bronchitis, emphysema, and asthma.

Primary Routes of entry:	Inhalation, eyes and/or skin contact, ingestion.

Section 5. Fire and Explosion Hazard Data

Flash Point	Non-combustible
Auto-Ignition	Not applicable.
Flammable limit	Not applicable.
Fire Extinguishing Media	Use extinguishing media appropriate for surrounding fire.
Special Fire-fighting Procedures	Wear proper personal protective equipment as listed in Section 8.
Hazardous combustion procedures	Not applicable.
Explosion Hazards	None known.

Section 6. Accidental Release Measures

Methods and materials for containment and cleaning up	Remove by dry sweeping or vacuum. Avoid creating excessive dust. It is recommended that gloves and a mask be worn while cleaning the spill. If already mixed with water, scrape up and place in container. Wear appropriate protective equipment as described in Sections 7 & 8.
Environmental precautions	Dispose of material in accordance with all applicable federal, state and local regulations. Can be disposed as an inert solid in a landfill. Slurry may plug drains.

Section 7. Handling and Storage

Precautions for safe handling	Avoid contact with skin and eyes. Do not breathe dust. Use only in well ventilated areas. A NIOSH approved dust mask or filtering face piece is recommended in poorly ventilated areas or when permissible exposure limits may be exceeded. When using, do not eat or drink. Wash hands before eating, drinking or smoking.
Conditions for safe storage, including an incompatibilities	Keep out of reach of children. Keep the container tightly closed and dry. Store in a covered, dry climate controlled area, away from incompatibles listed in Section 10.

Section 8. Exposure Controls/Personal Protection

Occupational exposure limits
US. OSHA table Z-1 Limits for Air Contaminants (29 CFR 1910.1000

Components	Type	Value	Form
Plaster of Paris	PEL	5 mg/m3	Respirable.
Portland Cement	TWA	5 mg/m3	Respirable.
Crystalline Silica	TWA	5 mg/m3	Respirable
Calcium Silica	TWA	10 mg/m3	Respirable

US. ACGIH Threshold Limit Values

Components	Type	Value	Form
Plaster of Paris	TWA	10 mg/m3	Inhalable fraction.
Portland Cement	TWA	1 mg/m3	Respirable
Crystalline Silica	TWA	0.025 mg/m3	Respirable.

US. NIOSH: Pocket Guide to Chemical Hazards

Components	Type	Value	Form

Plaster of Paris	TWA	5 mg/m3	Respirable
Portland Cement	TWA	5 mg/m3	Respirable
Crystalline Silica	TWA	.05 mg/m3	Respirable
Calcium Silicate	TWA	10 mg/m3	Respirable

Engineering Controls Ventilate to keep exposures below TLV requirements of the individual ingredients. General ventilation is expected to be satisfactory, Use local exhaust ventilation if necessary to control dust.

Respiratory protection None required where adequate ventilation conditions exist. A NIOSH approved dust mask or filtering face piece is recommended in poorly ventilated areas or when permissible exposure limits may be exceeded. Consult with respirator manufacturer to determine respirator selection, use, and limitations.)

Section 9. Physical and Chemical Properties

Appearance	Grey
Physical state	Powder/Solid.
Melting Point	Not applicable.
Freezing Point	Not applicable.
Odor	Low.
Odor threshold	Not determined.
Flash point	Non-combustible.
Flammability limits	Not applicable.
Solubility (in water) (g/100g)	0.15%
Initial boiling point	Not applicable.
Boiling Range	Not applicable.
Specific gravity	2.6-3.0
pH	10-12
Hardening time	45-120 minutes.
Vapor pressure	Not applicable.
Vapor density	Not applicable.
Auto-ignition temperature	None.
Evaporation rate	Not applicable.
Viscosity	Not applicable.
Upper flammability limit	Not determined.
Lower flammability limit	Not determined.
Decomposition temp	1,450°C/2642°F

Section 10. Chemical Stability and Reactivity

Conditions of reactivity	Reacts with water and produces large amounts of heat (normal condition of use).
Chemical stability	Stable at normal storage conditions and temperature.
Conditions to avoid	Water, high humidity, and acids.
Hazardous decomposition products	Stable at normal storage conditions and temperature.
Hazardous polymerization	None known.

Section 11. Toxicological Information

Information on likely routes of exposure

Acute effects The acute oral toxicity study [OECD TG 420] of calcium sulfate dihydrate showed that this chemical did not cause any changes and there was no evidence of germ cell mutagenicity.

Chronic effects	Crystalline Silica: Exposures to respirable crystalline silica are not expected during the normal use of this product; however, levels must be determined by in-house workplace hygiene testing.

Section 12. Ecological Information

Ecotoxicity	There are no known causes from this product that would harm the Ecology. However, the Portland cement has high alkaline properties (pH > 12), which are expected to be toxic to fish. The disposal of large quantities directly into waterways would be expected to cause significant aquatic life death.

Section 13 Disposal Considerations

Disposal procedure	Dispose of material in accordance with all applicable federal, state and local regulations. Can be disposed as an inert solid in a landfill. Slurry may plug drains. Do not dispose of directly in waterways or sewers.

Section 14. Transport Information

Department of Transportation (DOT) Requirements	This product is not regulated as a hazardous material by the United States (DOT) transportation regulations.
Canadian Transportation of dangerous goods	Not regulated as dangerous goods.
UN#	None Not regulated as dangerous goods.
ADNR	None.
RID/ADR:	Not classified.
Environmental hazards	None.
Annex II of MARPOL 73/78	Not applicable.
International bulk chemical code	Not applicable.

Section 15 Regulatory Information

U.S. EPA's Toxic Substance Control Act Chemical Substance Inventory	Not listed as reportable quantity or regulated quantity in SARA Title III Sections 302, 304, and 313. CAA Section 112® Regulated Chemicals for Accidental Release Prevention, CERLA Hazardous Substances, and RCRA Hazardous Waste.
Canadian Controlled Product Regulations	Crystalline Silica: IDL* Item #1406 Classification: D2A Limestone: WHMIS** Classification: D2A Portland Cement: WHMIS** Classification: E
European Union Directive 67/548/EEC (Annex III and IV)	R36, R37, R38, S37, S3, S39, and S51.

*IDL Item: Canadian Hazardous Product Act Ingredient Disclosure List
** WHMIS: Workplace Hazardous Safety Information System

Section16 Other Information

16. Other Information, including date of preparation or last revision

Issue date	11 April 2016
Version #	03

Further information

NFPA Ratings
Health: 1
Flammability: 0
Physical hazard: 0

Hazard Scale: 0 = Minimal 1 = Slight 2 = Moderate 3 = Serious 4 = Severe

NFPA ratings

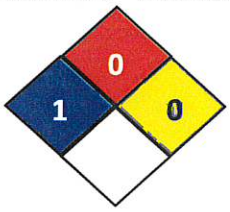

Disclaimer:

This information is provided without warranty. The information is believed to be correct. This information should be used to make an independent determination of the methods to safeguard workers and the environment.

Safety Data Sheet according to OSHA-GHS
(29 CFR part 1910.1200 HCS 2012)

PRODUCT NAME	Maxxon® Sound Mat Products
Product Code:	54070, 55070, 55075, 56010, 56020, 56030, 56040, 56050 56060, 56070, 56080
Date of Issue:	May 2015 Supersedes:

1. PRODUCT AND COMPANY IDENTIFICATION

Product Identifier:	Maxxon® Sound Mat Products
Trade Name:	Acousti-Mat® I Acousti-Mat® II Acousti-Mat® II HP Enkasonic® Enkasonic® HP Acousti-Mat® 3 Acousti-Mat® 3 HP Acousti-Mat® LP Acousti-Mat® LPR Acousti-Mat® SD Maxxon CSM
Recommended uses:	Sound Control
Restrictions on uses:	None identified
Supplier:	Maxxon Corporation 920 Hamel Road │ PO Box 253 Hamel, MN 55340
Company Telephone/Fax:	(763) 478-9600 / (763) 478-2431
Emergency Telephone Number:	(800) 424-9300 (CHEMTREC)

2. HAZARDS IDENTIFICATION

This product is not hazardous under US-GHS criteria.

3. COMPOSITION/INFORMATION ON INGREDIENTS

NA

4. FIRST AID MEASURES

NA

5. FIRE FIGHTING MEASURES

NA

6. ACCIDENTAL RELEASE MEASURES

NA

7. HANDLING AND STORAGE

NA

Safety Data Sheet according to OSHA-GHS
(29 CFR part 1910.1200 HCS 2012)

PRODUCT NAME Maxxon® Sound Mat Products
Product Code: 54070, 55070, 55075, 56010, 56020, 56030, 56040, 56050 56060, 56070, 56080
Date of Issue: May 2015 Supersedes:

8. EXPOSURE CONTROLS/PERSONAL PROTECTION

NA

9. PHYSICAL AND CHEMICAL PROPERTIES

NA

10. STABILITY AND REACTIVITY

NA

11. TOXICOLOGICAL INFORMATION

NA

12. ECOLOGICAL INFORMATION

NA

13. DISPOSAL CONSIDERATIONS

NA

14. TRANSPORATION INFORMATION

NA

15. REGULATORY INFORMATION

OSHA Hazard Communication Standard
Finished goods produced by Maxxon Corporation are *legally deemed as "article"* and as such are exempt from the Code of Federal Regulations, Title 29, Chapter XVII, Part 1910, Subpart Z, Section 1910, 1200 of the OSHA Hazard Communication Standard. Therefore, in accordance with the provisions of this Standard, Material Safety Data Sheets are not required of non-hazardous goods deemed as "articles".

SARA 313 Information
To the best of our knowledge, *this product contains no chemical subject to* SARA title III Section 313 supplier notification requirements.

Department of Transportation (D.O.T.)
Finished products manufactured by Maxxon Corporation are not regulated by D.O.T. when shipped domestically by land.

Safety Data Sheet according to OSHA-GHS (29 CFR part 1910.1200 HCS 2012)

PRODUCT NAME Maxxon® Sound Mat Products
Product Code: 54070, 55070, 55075, 56010, 56020, 56030, 56040, 56050 56060, 56070, 56080
Date of Issue: May 2015 Supersedes:

15. REGULATORY INFORMATION (CONTINUED)

Canadian WHMIS Information
This product is not a *"Controlled Product"* under WHMIS

Canadian TDG Information
For guidance, the Transportation of Dangerous Goods Classification for this product is: Not Regulated

16. OTHER INFORMATION, INCLUDING DATE OF PREPARATION OR LAST REVISION

Product List:
Acousti-Mat® I
Acousti-Mat® II
Acousti-Mat® II HP
Enkasonic®
Enkasonic® HP
Acousti-Mat® 3
Acousti-Mat® 3 HP
Acousti-Mat® LP
Acousti-Mat® LPR
Acousti-Mat® SD
Maxxon CSM

Issue Date: May 2015
Version #: 01
Revision Date:
Prepared by: Maxxon Corporation

Disclaimer:
Safety Data Sheets (SDS) are not required for Maxxon Acousti-Mat Sound Control Products (Acousti-Mat I, Acousti-Mat II, Acousti-Mat II HP, Enkasonic, Enkasonic HP, Acousti-Mat 3, Acousti-Mat 3 HP, Acousti-Mat LP, Acousti-Mat LPR, Acousti-Mat SD, and Maxxon CSM). This SDS is intended to quickly provide useful information to the user(s) of this material or product. It is not intended to serve as a comprehensive discussion of all possible risks or hazards, and it assumes a reasonable use of the product. The information contained in this SDS is believed to be accurate as the date of preparation of this SDS and has been compiled from sources believed to be reliable. It is offered for your consideration, investigation and verification. The user or handler (or their employer) should consider the specific conditions in which this material will be used, handled or stored and determine what specific safety or other precautions are required. Employers should ensure that their employees, agents, contractors and customers who will use the product receive adequate warnings and safe handling procedures, including a current SDS. Product users or handlers (or their employer) who are unsure of what specific precautions are required should consult their employer, product supplier, or safety or health professionals before handling or working with this product. Please notify us immediately if you believe this SDS or other safety and health information about this product is inaccurate or incomplete.

SAFETY DATA SHEET

Date Prepared : 09/06/2017
MSDS No : PP EDBT H2O
Date Revised : 09/06/2017
Revision No : 3

PACIFIC POLYMERS Elasto-Deck BT H2O

1. PRODUCT AND COMPANY IDENTIFICATION

PRODUCT NAME: PACIFIC POLYMERS Elasto-Deck BT H2O

MANUFACTURER
ITW Polymers Sealants North America
12271 Monarch St.
Garden Grove, CA 92841
Product Stewardship: (714) 898-0025

24 HR. EMERGENCY TELEPHONE NUMBERS
CHEMTREC (US Transportation): (800) 424-9300

COMMENTS: PACIFIC POLYMERS and Elasto-Deck are a registered trademarks of Illinois Tool Works, Inc.

2. HAZARDS IDENTIFICATION

GHS CLASSIFICATIONS

Health:

Acute Toxicity (Inhalation), Category 4
Skin Irritation, Category 2
Eye Irritation, Category 2A
Respiratory Sensitization, Category 1
Skin Sensitization, Category 1
Carcinogenicity, Category 1B
Target Organ Toxicity (Single exposure), Category 3
Target Organ Toxicity (Repeated exposure), Category 2

Environmental:

Acute Hazards to the Aquatic Environment, Category 2
Chronic Hazards to the Aquatic Environment, Category 2

Physical:

Flammable Liquids, Category 3

GHS LABEL

Environment

Exclamation mark

Flame

Health hazard

SIGNAL WORD: DANGER

HAZARD STATEMENTS

H226: Flammable liquid and vapour.
H304: May be fatal if swallowed and enters airways.
H315: Causes skin irritation.
H317: May cause an allergic skin reaction.
H319: Causes serious eye irritation.
H332: Harmful if inhaled.
H334: May cause allergy or asthma symptoms or breathing difficulties if inhaled.
H335: May cause respiratory irritation.

SAFETY DATA SHEET

Date Prepared : 09/06/2017
MSDS No : PP EDBT H2O
Date Revised : 09/06/2017
Revision No : 3

PACIFIC POLYMERS Elasto-Deck BT H2O

H336: May cause drowsiness or dizziness.
H401: Toxic to aquatic life.
H411: Toxic to aquatic life with long lasting effects.

PRECAUTIONARY STATEMENT(S)

Prevention:

[201]: Obtain special instructions before use.
P202: Do not handle until all safety precautions have been read and understood.
P210: Keep away from heat, hot surfaces, sparks, open flames and other ignition sources. No smoking.
P233: Keep container tightly closed.
P240: Ground and bond container and receiving equipment.
P241: Use explosion-proof [electrical/ventilating/lighting] equipment.
P242: Use non-sparking tools.
P243: Take action to prevent static discharges.
P260: Do not breathe dust/fume/gas/mist/vapours/spray.
P264: Wash thoroughly after handling.
P271: Use only outdoors or in a well-ventilated area.
P272: Contaminated work clothing should not be allowed out of the workplace.
P273: Avoid release to the environment.
P280: Wear protective gloves/protective clothing/eye protection/face protection.
P284: [In case of inadequate ventilation] wear respiratory protection.

Response:

P301+P310: IF SWALLOWED: Immediately call a POISON CENTER/doctor.
P302+P352: IF ON SKIN: Wash with plenty of water.
P303+P361+P353: IF ON SKIN (or hair): Take off immediately all contaminated clothing. Rinse skin with water [or shower].
P304+P340: IF INHALED: Remove person to fresh air and keep comfortable for breathing.
P305+P351+P338: IF IN EYES: Rinse cautiously with water for several minutes. Remove contact lenses, if present and easy to do. Continue rinsing.
P308+P313: IF exposed or concerned: Get medical advice/ attention.
P312: Call a POISON CENTER/doctor if you feel unwell.
P314: Get medical advice/attention if you feel unwell.
P321: Specific treatment is required.
P331: Do NOT induce vomiting.
P332+P313: If skin irritation occurs: Get medical advice/attention.
P333+P313: If skin irritation or rash occurs: Get medical advice/attention.
P337+P313: If eye irritation persists: Get medical advice/attention.
P342+P311: If experiencing respiratory symptoms: Call a POISON CENTER/doctor.
P362: Take off contaminated clothing.
P370+P378: In case of fire: Use appropriate media to extinguish.
P391: Collect spillage.

Storage:

P403+P233: Store in a well-ventilated place. Keep container tightly closed.
P403+P235: Store in a well-ventilated place. Keep cool.
P405: Store locked up.

Disposal:

P501: Dispose of contents/container according to local, regional, national, and international regulations.

EMERGENCY OVERVIEW

SAFETY DATA SHEET

Date Prepared : 09/06/2017
MSDS No : PP EDBT H2O
Date Revised : 09/06/2017
Revision No : 3

PACIFIC POLYMERS Elasto-Deck BT H2O

IMMEDIATE CONCERNS: WARNING! Combustible liquid and vapor. Contains Toluene Diisocyanate (CAS No. 26741-62-5). May cause respiratory tract irritation. May cause allergic respiratory reaction. Harmful if inhaled. Respiratory sensitizer. May cause lung damage. Lung damage and respiratory sensitization may be permanent. May cause skin irritation. May cause allergic skin reaction. Skin sensitizer. TDI is included in the HTP Annual Report on Carcinogens. Preliminary results from a TDI health study indicate that overexposure to a respiratory irritant resulting on lower respiratory tract symptoms could increase the risks of developing asthma-like reactions from subsequent TDI exposure.

POTENTIAL HEALTH EFFECTS

EYES: May cause eye irritation such as redness, tearing, and itching.

SKIN: May cause skin irritation upon contact. May cause allergic reaction in susceptible individuals.

INGESTION: May cause irritation of the mouth, pharynx, esophagus, and stomach. May cause gastrointestinal irritation, nausea and vomiting.

INHALATION: TDI vapors or mist concentration at or above the TLV can irritate (burning sensation) the mucous membrane in the respiratory tract causing runny nose, sore throat, coughing, chest discomfort, shortness of breath and reduced lung function. Persons with pre-existing non-specific bronchial hyper-reactivity can respond to concentrations well below the TLV with similar symptoms as well as asthma attacks. Exposure well above the TLV may lead to bronchitis, bronchial spasm, and pulmonary edema. These effects are usually reversible. Chemical or hypersensitive pneumonitis, with flu-like symptoms (e.g. fever, chills) has also been reported. These symptoms can be delayed up to several hours after exposure. As a result of previous repeated overexposure or a single large dose, certain individuals develop isocyanate sensitization (chemical asthma), which will cause them to react to a later exposure to isocyanate at levels well below the TLV. Similar to many non-specific asthmatic responses, there are reports that once sensitized an individual can experience these symptoms upon exposure to dust, cold air, or other irritants. This increase lung sensitivity can persist for weeks and in severe cases for several years. Overexposure to isocyanates has also been reported to cause lung damage (decrease in lung function), which may be permanent. Sensitization can be either temporary or permanent.

ROUTES OF ENTRY: Eye and Skin Contact, Inhalation and Ingestion

IRRITANCY: Eye and skin irritation.

SENSITIZATION: May cause allergic respiratory and skin reaction. Respiratory and skin sensitizer.

3. COMPOSITION / INFORMATION ON INGREDIENTS

Chemical Name	Wt.%	CAS
Distillate Aromatic Extract - Extracts (petroleum), Light Paraffinic Distillate Solvent	< 35	64742-05-8
Carbon Black	< 3	1333-86-4
Aromatic Hydrocarbons	< 2.5	64742-95-6
1,2,4-Trimethylbenzene	< 0.1	95-63-6
Toluene Diisocyanate	< 0.5	26471-62-5
Xylenes (o-,m-,p- Isomers)	< 0.05	1330-20-7
Cumene	< 0.05	98-82-8

SAFETY DATA SHEET

Date Prepared : 09/06/2017
MSDS No : PP EDBT H2O
Date Revised : 09/06/2017
Revision No : 3

PACIFIC POLYMERS Elasto-Deck BT H2O

4. FIRST AID MEASURES

EYES: Immediately flush eyes with plenty of tempered water (at least 15-20 minutes) lifting upper and lower eye lids occasionally. Get immediate medical attention.

SKIN: Immediately flush skin with plenty of water. Remove clothing. Get medical attention immediately. Wash clothing separately before reuse. An MDI study has demonstrated that a polyglycol-based skin cleaner or corn oil may be more effective than soap and water.

INGESTION: If swallowed, do NOT induce vomiting. Give victim two glasses (16 ounces) of water or milk. Call a physician or poison control center immediately. Never give anything by mouth to an unconscious person.

INHALATION: Remove to fresh air. If not breathing, give artificial respiration or give oxygen by trained personnel. Seek immediate medical attention. Asthmatic type symptoms may develop and may be immediate or delayed up to several hours. Treatment is essentially symptomatic.

SIGNS AND SYMPTOMS OF OVEREXPOSURE

EYES: Causes eye irritation.

SKIN: Contact causes skin irritation.

INGESTION: Ingestion of this material can cause mouth, throat, esophageal, and gastrointestinal tract irritation.

INHALATION: Review inhalation signs and symptoms of TDI under Potential Health Effects.

NOTES TO PHYSICIAN: Medical supervision of all employees who handle or come into contact with isocyanates is recommended. This should include pre-employment and periodic medical examinations with respiratory function tests (FEV, FVC as minimum). Persons with asthmatic type conditions, chronic bronchitis, other chronic respiratory diseases or recurrent skin eczema or sensitization should be excluded from working with TDI. Once a person is diagnosed as sensitized, no further exposure can be permitted.

5. FIRE FIGHTING MEASURES

FLAMMABLE CLASS: Class II

GENERAL HAZARD: Combustible Liquid.

EXTINGUISHING MEDIA: Use dry chemical foam, carbon dioxide or dry chemical powder. If water is used is used, use very large quantities. The reaction between water and hot isocyanate can be vigorous.

OTHER CONSIDERATIONS: Diisocyanates reacts exothermically with water, which may create excessive pressure in containers.

EXPLOSION HAZARDS: Water contamination will produce carbon dioxide. Do not reseal contaminated containers as pressure build-up may result in rupturing of the container. Empty containers may contain product residue which can be dangerous. Do not pressurize, cut, weld, braze, solder, drill, grind or expose to heat, flame, sparks, static electricity or other ignition sources.

FIRE FIGHTING PROCEDURES: As in any fire, wear self-contained breathing apparatus with pressure-demand, full face piece SCBA (MSHA/NIOSH approved or equivalent) and full protective gear. Use water to cool containers exposed to fire.

SENSITIVE TO STATIC DISCHARGE: Not Applicable

SENSITIVITY TO IMPACT: None known.

HAZARDOUS DECOMPOSITION PRODUCTS: Carbon Dioxide, Carbon Monoxide, Nitrogen Oxide, Isocyanate Vapors and Mist, Traces of HCN.

6. ACCIDENTAL RELEASE MEASURES

SAFETY DATA SHEET

Date Prepared : 09/06/2017
MSDS No : PP EDBT H2O
Date Revised : 09/06/2017
Revision No : 3

PACIFIC POLYMERS Elasto-Deck BT H2O

SMALL SPILL: Absorb the isocyanate with sawdust or other absorbent and shovel into open top containers. Do not make containers pressure tight. Transport to a well ventilated area, preferably outside, and treat with neutralizing solution consisting of a mixture of 90% water, 8% concentrated ammonium hydroxide or sodium carbonate, and 2% liquid detergent. Add about 10 parts of neutralizer per part of isocyanate by mixing. Allow to stand for 48 hours, allowing evolved carbon dioxide to escape.

LARGE SPILL: Keep spectators away. Only those persons who are adequately trained, authorized and wearing the required personal protective equipment (PPE) should participate in spill response and clean-up. Know and prepare for spill response before using or handling this product. Dike and contain spill with inert material (e.g. sand, earth). Transfer liquids to covered and labeled containers for disposal. Use appropriate PPE. Place absorbent diking materials in covered containers for disposal. Prevent contamination of sewers, streams, and groundwater with spilled material or used absorbent.

If temporary control of isocyanate vapor is required, a blanket of protein foam (available at most Fire Departments) may be placed over the spill.

7. HANDLING AND STORAGE

GENERAL PROCEDURES: For professional or industrial use only. Follow label instructions. Keep out of the reach of children. Not for consumption. No smoking. Do not breathe vapors. Avoid contact with body. Empty containers must not be washed and re-used for any purpose. Contact lens wearers must wear protective eye wear around chemical vapors and liquid. Wash hands thoroughly after handling. To prevent build-up of vapors, use adequate natural and/or mechanical ventilation (e.g. open all windows and doors to achieve cross ventilation).

HANDLING: Follow all SDS/label precautions even after container is emptied because they may retain product residues. Containers should be tightly closed to prevent contamination with foreign materials and moisture. Open containers should be used within a day or two to prevent the product from skinning. Employee education and training in the safe handling of this product are required under the Federal OSHA Hazard Communication Standard. Avoid contact of liquid with eyes and prolonged skin exposure.

STORAGE: Keep container closed when not in use. Store in a dry, well ventilated area, out of the sun and away from ignition sources. Do not remove or deface label. Prevent water or moist air from entering container.

STORAGE TEMPERATURE: 15.5°C (60.0°F) Minimum to 29.4°C (85.0°F) Maximum

SHELF LIFE: 6 months minimum (unopened containers stored in cool dry locations)

8. EXPOSURE CONTROLS / PERSONAL PROTECTION

EXPOSURE GUIDELINES

OSHA HAZARDOUS COMPONENTS (29 CFR1910.1200)				
	EXPOSURE LIMITS			
Chemical Name	**Type**		**ppm**	**mg/m³**
Distillate Aromatic Extract - Extracts (petroleum), Light Paraffinic Distillate Solvent	**OSHA PEL**	**TWA**	NL [1]	NL [1]
		STEL	NL [1]	NL [1]
	ACGIH TLV	**TWA**	NL [1]	0.2 mg/m3 [1]
		STEL	NL [1]	NL [1]

SAFETY DATA SHEET

Date Prepared : 09/06/2017
MSDS No : PP EDBT H2O
Date Revised : 09/06/2017
Revision No : 3

PACIFIC POLYMERS Elasto-Deck BT H2O

Carbon Black	**OSHA PEL**	**TWA**	NL [1]	3.5 [1]
		STEL	NL [1]	NL [1]
	ACGIH TLV	**TWA**	NL [1]	3.5 [1]
		STEL	NL [1]	NL [1]
Aromatic Hydrocarbons	**OSHA PEL**	**TWA**	NL [1]	NL [1]
		STEL	NL [1]	NL [1]
	ACGIH TLV	**TWA**	NL [1]	NL [1]
		STEL	NL [1]	NL [1]
1,2,4-Trimethylbenzene	**OSHA PEL**	**TWA**	25 ppm	125 mg/m3
		STEL	NL [1]	NL [1]
	ACGIH TLV	**TWA**	25 ppm	123 mg/m3
		STEL	NL [1]	NL [1]
Toluene Diisocyanate	**OSHA PEL**	**TWA**	0.005 ppm	0.04 mg/m3
		STEL	0.02 ppm	0.15 mg/m3
	ACGIH TLV	**TWA**	0.005 ppm [1]	NL [1]
		STEL	0.02 ppm [1]	NL [1]
Xylenes (o-,m-,p- Isomers)	**OSHA PEL**	**TWA**	100 ppm	435 mg/m3
		STEL	NL [1]	NL [1]
	ACGIH TLV	**TWA**	100 ppm	434 mg/m3
		STEL	150 ppm	651 mg/m3
Cumene	**OSHA PEL**	**TWA**	50 ppm	245 mg/m3
		STEL	NL [1]	NL [1]
	ACGIH TLV	**TWA**	50 ppm	246 mg/m3
		STEL	NL [1]	NL [1]

Footnotes:
1. NL = Not Listed

ENGINEERING CONTROLS: Local exhaust ventilation or other engineering controls are recommended to maintain levels below the TLV whenever TDI is processed, heated or spray applied. For spray applications, an air-supplied respirator must be worn. Standard reference sources regarding industrial ventilation (i.e. ACGIH Industrial Ventilation) should be consulted for guidance about proper ventilation.

PERSONAL PROTECTIVE EQUIPMENT

EYES AND FACE: Wear safety glasses with side shields, goggles, or a full-face shield. Do not wear contact lenses.

SKIN: Wear chemical resistant gloves such as nitrile, neoprene or butyl rubber. Wear chemical protective

SAFETY DATA SHEET

Date Prepared : 09/06/2017
MSDS No : PP EDBT H2O
Date Revised : 09/06/2017
Revision No : 3

PACIFIC POLYMERS Elasto-Deck BT H2O

clothing & boots to prevent repeated or prolonged skin contact.

RESPIRATORY: Where vapor concentrations exceed or are likely to exceed the occupational exposure limits, a NIOSH approved continuous flow supplied air respirator, hood or helmet is recommended. A NIOSH approved self-contained positive pressure breathing apparatus with full face piece is required for spills and/or emergencies. TDI has poor warning properties, since the concentration at which TDI can be smelled is substantially higher that the maximum exposure limit. A respiratory protection program that meets OSHA 1910.134 and ANSI Z88.2 requirements must be followed whenever workplace conditions warrant a respirator's use.

WORK HYGIENIC PRACTICES: Use good hygiene practices when handling this material. Wash hands thoroughly after use.

OTHER USE PRECAUTIONS: Facilities storing or utilizing this material should be equipped with an eyewash facility and a safety shower.

9. PHYSICAL AND CHEMICAL PROPERTIES

PHYSICAL STATE: Liquid

ODOR: Oily Solvent Odor

ODOR THRESHOLD: Not Determined

COLOR: Black

pH: Not Determined

PERCENT VOLATILE: 8

Notes: +/- 2% by weight

FLASHPOINT AND METHOD: 48.8°C (120°F) Pensky-Martens CC

FLAMMABLE LIMITS: Not Determined

AUTOIGNITION TEMPERATURE: Not Applicable

VAPOR PRESSURE: Not Determined

VAPOR DENSITY: > 1 (Air=1)

BOILING POINT: 148.8°C (300°F) to 287.8°C (550°F)

FREEZING POINT: Not Determined

MELTING POINT: Not Determined

POUR POINT: Not Determined

SOLUBILITY IN WATER: Reacts with water

PARTITION COEFFICIENT: N-OCTANOL/WATER: Not Determined

EVAPORATION RATE: < 1.0 (n-Butyl Acetate=1)

DENSITY: 9.17 lbs/gal

PARTICLE SIZE: Not Determined

SPECIFIC GRAVITY: 1.05 to 1.15

VISCOSITY #1: 35000 cps at (75.0°F)

MOLECULAR WEIGHT: Not Determined

(VOC): 81 gr/L EPA Method 24 VOC

OXIDIZING PROPERTIES: Not Determined

SAFETY DATA SHEET

Date Prepared : 09/06/2017
MSDS No : PP EDBT H2O
Date Revised : 09/06/2017
Revision No : 3

PACIFIC POLYMERS Elasto-Deck BT H2O

10. STABILITY AND REACTIVITY

REACTIVITY: Yes

HAZARDOUS POLYMERIZATION: Product will not undergo polymerization.

STABILITY: Stable.

CONDITIONS TO AVOID: Avoid contact with water, alcohol, amines, acids and alkalis. Avoid high temperature.

HAZARDOUS DECOMPOSITION PRODUCTS: Carbon monoxide, carbon dioxide, nitrogen oxide, isocyanate vapors and mist, traces of HCN.

INCOMPATIBLE MATERIALS: Reacts with water, with the formation of carbon dioxide. Risk of bursting. Reacts with alcohols, acids, alkalies, and amines. Risk of exothermic reaction. Risk of violent reaction.

11. TOXICOLOGICAL INFORMATION

ACUTE TOXICITY

Chemical Name	ORAL LD_{50} (rat)	DERMAL LD_{50} (rabbit)	INHALATION LC_{50} (rat)
Distillate Aromatic Extract - Extracts (petroleum), Light Paraffinic Distillate Solvent	No data	No data	No data
Carbon Black	No data	No data	No data
Aromatic Hydrocarbons	No data	No data	No data
1,2,4-Trimethylbenzene	5000 mg/kg (rats)	No data	18000 mg/cub m (4-hr dose - rat)
Toluene Diisocyanate	4130 to 5110 mg/kg (rats)	> 9400 mg/kg (rabbits)	49 to 5034 ppm (4-hr dose - rat)
Xylenes (o-,m-,p- Isomers)	4300 mg/kg	2000 mg/kg	26800 ppm
Cumene	2260 mg/kg (rats)	No data	No data

SERIOUS EYE DAMAGE/IRRITATION: Mild to moderate eyes and skin irritation.

RESPIRATORY OR SKIN SENSITISATION: Respiratory and Skin Sensitizer

CARCINOGENICITY

Chemical Name	NTP Status	IARC Status
Toluene Diisocyanate	2	2B
Xylenes (o-,m-,p- Isomers)		3
Cumene		2B

12. ECOLOGICAL INFORMATION

ENVIRONMENTAL DATA: This product contains components that may be harmful to aquatic organisms and may cause long term adverse effects in the aquatic environment.

ECOTOXICOLOGICAL INFORMATION: Contains components that are potentially toxic to freshwater and

SAFETY DATA SHEET

Date Prepared : 09/06/2017
MSDS No : PP EDBT H2O
Date Revised : 09/06/2017
Revision No : 3

PACIFIC POLYMERS Elasto-Deck BT H2O

saltwater ecosystems.

BIOACCUMULATION/ACCUMULATION: Contains components with the potential to bio-accumulate.

13. DISPOSAL CONSIDERATIONS

DISPOSAL METHOD: Dispose of in accordance with all local, state and federal regulations.

14. TRANSPORT INFORMATION

DOT (DEPARTMENT OF TRANSPORTATION)

PROPER SHIPPING NAME: Non-Regulated Material per 49 CFR 173.150(f)

MARINE POLLUTANT #1: None

AIR (ICAO/IATA)

SHIPPING NAME: Resin Solution

UN/NA NUMBER: 1866

PRIMARY HAZARD CLASS/DIVISION: 3

PACKING GROUP: III

LABEL: FLAMMABLE LIQUID

VESSEL (IMO/IMDG)

SHIPPING NAME: Resin Solution

UN/NA NUMBER: 1866

PRIMARY HAZARD CLASS/DIVISION: 3

PACKING GROUP: III

MARINE POLLUTANT #1: None

LABEL: FLAMMABLE LIQUID

15. REGULATORY INFORMATION

UNITED STATES

SARA TITLE III (SUPERFUND AMENDMENTS AND REAUTHORIZATION ACT)

FIRE: No **PRESSURE GENERATING:** No **REACTIVITY:** Yes **ACUTE:** Yes **CHRONIC:** Yes

EPCRA SECTION 313 SUPPLIER NOTIFICATION

Chemical Name	Wt.%	CAS
Toluene Diisocyanate	< 0.5	26471-62-5

CERCLA (COMPREHENSIVE RESPONSE, COMPENSATION, AND LIABILITY ACT)

Chemical Name	Wt.%	CERCLA RQ
Toluene Diisocyanate	< 0.5	100
Xylenes (o-,m-,p- Isomers)	< 0.05	100
Cumene	< 0.05	5,000

TSCA (TOXIC SUBSTANCE CONTROL ACT)

SAFETY DATA SHEET

Date Prepared : 09/06/2017
MSDS No : PP EDBT H2O
Date Revised : 09/06/2017
Revision No : 3

PACIFIC POLYMERS Elasto-Deck BT H2O

Chemical Name	CAS	TSCA SECTION
Distillate Aromatic Extract - Extracts (petroleum), Light Paraffinic Distillate Solvent	64742-05-8	
Carbon Black	1333-86-4	
Aromatic Hydrocarbons	64742-95-6	
1,2,4-Trimethylbenzene	95-63-6	
Toluene Diisocyanate	26471-62-5	
Xylenes (o-,m-,p- Isomers)	1330-20-7	8a, 8d, 12b,
Cumene	98-82-8	

CLEAN AIR ACT

Chemical Name	Wt.%	CAS
Toluene Diisocyanate	< 0.5	26471-62-5
Xylenes (o-,m-,p- Isomers)	< 0.05	1330-20-7

STATES WITH SPECIAL REQUIREMENTS

Chemical Name	Requirements
1,2,4-Trimethylbenzene	Illinois Right to Know List Minnesota Right to Know List New Jersey Right to Know List Pennsylvania Right to Know List Rhode Island Right to Know List
Toluene Diisocyanate	Massachusetts Right to Know List New Jersey Right to Know List Pennsylvania Right to Know List
Xylenes (o-,m-,p- Isomers)	New Jersey Right to Know List Pennsylvania Right to Know List Massachusetts Toxic Use Reduction Act (TURA) Reportable Chemical Illinois Right to Know List Minnesota Right to Know List Rhode Island Right to Know List
Cumene	Massachusetts Right to Know List Pennsylvania Right to Know List Minnesota Right to Know List Illinois Right to Know List Minnesota Right to Know List Rhode Island Right to Know List

CALIFORNIA PROPOSITION 65

SAFETY DATA SHEET

Date Prepared : 09/06/2017
MSDS No : PP EDBT H2O
Date Revised : 09/06/2017
Revision No : 3

PACIFIC POLYMERS Elasto-Deck BT H2O

Chemical Name	Wt.%	Listed
Toluene Diisocyanate	< 0.5	Cancer
Cumene	< 0.05	Cancer

CANADA

WHMIS HAZARD SYMBOL AND CLASSIFICATION

Toxic

Combustible Liquid

16. OTHER INFORMATION

Date Revised: 09/06/2017

INFORMATION CONTACT: (714) 898-0025

REVISION SUMMARY: This MSDS replaces the 09/06/2017 MSDS.

HMIS RATING

HEALTH	*	2
FLAMMABILITY		2
PHYSICAL HAZARD		1
PERSONAL PROTECTION		B

NFPA CODES

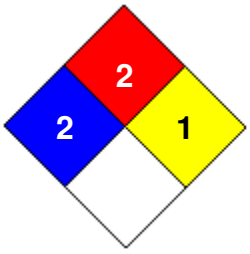

GENERAL STATEMENTS: Keep out of reach of children
For professional or industrial use only

MANUFACTURER DISCLAIMER: This document may be used to comply with OSHA's Hazardous Communication Standard, 29 CFR 1910.1200.

To the best of our knowledge, the information contained in this SDS is accurate. It is intended to assist the user in his/her evaluation of the product's hazards and safety precautions to be taken in its use. The data in this SDS relate only to the specific material designated herein. We do not assume liability for the use of, or reliance on this information, nor do we guarantee its accuracy or completeness.

This information is furnished without warranty, expressed or implied, except that it is accurate to the best knowledge of ITW Polymers Sealants North America. The data on this sheet relates only to the specific material designated herein. ITW Polymers Sealants North America assumes no legal responsibility for use or reliance upon these data.

ELASTO-POXY PRIMER VOC (A-Component)

Safety Data Sheet

according to Federal Register / Vol. 77, No. 58 / Monday, March 26, 2012 / Rules and Regulations

Issue date: 09/09/2021 Version: 1.0

SECTION 1: Identification

1.1. Identification

Product form : Mixture

Product name : ELASTO-POXY PRIMER VOC (A-Component)

1.2. Recommended use and restrictions on use

No additional information available

1.3. Supplier

ITW Polymers and Sealants NA
12055 Cutten Road
Houston, TX 77066
T 972-438-9111

1.4. Emergency telephone number

Emergency number : CHEMTREC (US Transportation): (800) 424-9300 International: +1 (703) 527-3887

SECTION 2: Hazard(s) identification

2.1. Classification of the substance or mixture

GHS-US classification

Flammable liquids, Category 3	H226
Skin corrosion/irritation, Category 2	H315
Serious eye damage/eye irritation, Category 2	H319
Skin sensitisation, Category 1	H317
Carcinogenicity, Category 2	H351
Hazardous to the aquatic environment - Chronic Hazard, Category 2	H411

2.2. GHS Label elements, including precautionary statements

GHS US labelling

Hazard pictograms (GHS US) :

Signal word (GHS US) : Warning

Hazard statements (GHS US) : H226 - Flammable liquid and vapor.
H315 - Causes skin irritation.
H317 - May cause an allergic skin reaction.
H319 - Causes serious eye irritation.
H351 - Suspected of causing cancer.
H411 - Toxic to aquatic life with long lasting effects.

Precautionary statements (GHS US) : P201 - Obtain special instructions before use.
P202 - Do not handle until all safety precautions have been read and understood.
P210 - Keep away from heat, hot surfaces, sparks, open flames and other ignition sources. No smoking.
P233 - Keep container tightly closed.
P240 - Ground/Bond container and receiving equipment.
P241 - Use explosion-proof electrical/ventilating/lighting equipment.
P242 - Use only non-sparking tools.
P243 - Take precautionary measures against static discharge.
P261 - Avoid breathing mist, vapors, spray.
P264 - Wash hands, forearms and face thoroughly after handling.
P272 - Contaminated work clothing must not be allowed out of the workplace.
P273 - Avoid release to the environment.
P280 - Wear protective gloves, eye protection, face protection, protective clothing
P302+P352 - If on skin: Wash with plenty of soap and water.
P303+P361+P353 - IF ON SKIN (or hair): Take off immediately all contaminated clothing. Rinse skin with water/shower
P305+P351+P338 - IF IN EYES: Rinse cautiously with water for several minutes. Remove contact lenses, if present and easy to do. Continue rinsing
P308+P313 - If exposed or concerned: Get medical advice/attention.
P333+P313 - If skin irritation or rash occurs: Get medical advice/attention.

P337+P313 - If eye irritation persists: Get medical advice/attention.
P362+P364 - Take off contaminated clothing and wash it before reuse.
P363 - Wash contaminated clothing before reuse.
P370+P378 - In case of fire: Use media other than water to extinguish.
P391 - Collect spillage.
P403+P235 - Store in a well-ventilated place. Keep cool.
P405 - Store locked up.
P501 - Dispose of contents/container to a licensed hazardous-waste disposal contractor or collection site except for empty clean containers which can be disposed of as non-hazardous waste.

2.3. Other hazards which do not result in classification

No additional information available

2.4. Unknown acute toxicity (GHS US)

Not applicable

SECTION 3: Composition/information on ingredients

3.1. Substances

Not applicable

3.2. Mixtures

Name	Product identifier	%*
Oxirane, 2,2'-[(1-methylethylidene)bis(4,1-phenyleneoxymethylene)]bis-, homopolymer	(CAS-No.) 25085-99-8	15 – 40
Benzene, 1-chloro-4-(trifluoromethyl)-	(CAS-No.) 98-56-6	15 – 40
Phenol, polymer with formaldehyde, glycidyl ether	(CAS-No.) 28064-14-4	5 – 10
Methyl isobutyl ketone	(CAS-No.) 108-10-1	3 – 7
Xylenes (o-, m-, p- isomers)	(CAS-No.) 1330-20-7	1 – 5
Ethylbenzene	(CAS-No.) 100-41-4	0.1 – 1

*** In accordance with paragraph (i) of the OSHA Hazard Communication Standard (29 CFR §1910.1200), the specific chemical identity or exact weight % has been withheld as a trade secret.**

SECTION 4: First-aid measures

4.1. Description of first aid measures

First-aid measures general : If exposed or concerned, get medical attention/advice. Show this safety data sheet to the doctor in attendance. Wash contaminated clothing before re-use. Never give anything to an unconscious person.

First-aid measures after inhalation : IF INHALED: Remove to fresh air and keep at rest in a position comfortable for breathing. Get medical attention if breathing is affected. If breathing is difficult, supply oxygen.

First-aid measures after skin contact : IF ON SKIN (or clothing): Remove affected clothing and wash all exposed skin with water for at least 15 minutes. If irritation develops or persists, get medical attention immediately.

First-aid measures after eye contact : IF IN EYES: Immediately flush with plenty of water for at least 15 minutes. Remove contact lenses if present and easy to do so. Continue rinsing if pain, blinking, or irritation develops or persists, get medical attention. Continue rinsing.

First-aid measures after ingestion : IF SWALLOWED: rinse mouth thoroughly. Do not induce vomiting without advice from poison control center. Get medical attention if you feel unwell.

4.2. Most important symptoms and effects (acute and delayed)

Symptoms/effects : Causes skin irritation. May cause an allergic skin reaction. Causes serious eye irritation. Suspected of causing cancer.

Symptoms/effects after inhalation : May cause respiratory irritation.

Symptoms/effects after skin contact : Causes skin irritation. May cause an allergic skin reaction.

Symptoms/effects after eye contact : Causes serious eye irritation.

Symptoms/effects after ingestion : May cause gastrointestinal irritation.

Chronic symptoms : Suspected of causing cancer.

4.3. Immediate medical attention and special treatment, if necessary

No additional information available

SECTION 5: Fire-fighting measures

5.1. Suitable (and unsuitable) extinguishing media

Suitable extinguishing media : Carbon dioxide. Foam. Dry powder. Sand.

Unsuitable extinguishing media : Do not use a water jet since it may cause the fire to spread.

5.2. Specific hazards arising from the chemical

Fire hazard	:	Flammable liquid and vapor.
Explosion hazard	:	Avoid fire, sparks, static electricity and hot surfaces. Liquid readily evaporates at room/ambient temperature. Vapors are invisible, flammable, heavier than air, and may accumulate in low areas and spread long distances. Distant ignition and flashback are possible.
Reactivity	:	No data available.

5.3. Special protective equipment and precautions for fire-fighters

Firefighting instructions	:	Use cold water spray to cool fire-exposed containers to minimize risk of rupture. Exercise caution when fighting any chemical fire. Do not dispose of fire-fighting water in the environment. Prevent human exposure to fire, fumes, smoke and products of combustion.
Protection during firefighting	:	Do not enter fire area without proper protective equipment, including respiratory protection.
Other information	:	Avoid smoke inhalation.

SECTION 6: Accidental release measures

6.1. Personal precautions, protective equipment and emergency procedures

General measures	:	Evacuate area. Keep upwind. Ventilate area. Spill should be handled by trained cleaning personnel properly equipped with respiratory and eye protection.

6.1.1. For non-emergency personnel

Protective equipment	:	Wear Protective equipment as described in Section 8.
Emergency procedures	:	Evacuate unnecessary personnel.

6.1.2. For emergency responders

Protective equipment	:	Wear suitable protective clothing, gloves and eye or face protection.

6.2. Environmental precautions

Prevent entry to sewers and public waters. Notify authorities if product enters sewers or public waters. Avoid release to the environment.

6.3. Methods and material for containment and cleaning up

For containment/cleaning up : SMALL SPILL: Dike area to contain spill. Take precautions as necessary to prevent contamination of ground and surface waters. Recover spilled material on absorbent, such as sawdust or vermiculite, and sweep into closed containers for disposal. After all visible traces, including ignitable vapors, have been removed, thoroughly wet vacuum the area. Do not flush to sewer. If area of spill is porous, remove as much contaminated earth and gravel, etc. as necessary and place in closed containers for disposal. Only those persons who are adequately trained, authorized, and wearing the required personal protective equipment (PPE) should participate in spill response and clean-up.

LARGE SPILL: Keep spectators away. Only those persons who are adequately trained, authorized and wearing the required personal protective equipment (PPE) should participate in spill response and clean-up. Ventilate the area by natural means or by explosion proof means (i.e. fans). Know and prepare for spill response before using or handling this product. Eliminate all ignition sources (flames, hot surfaces, portable heaters and sources of electrical, static, or frictional sparks). Dike and contain spill with inert material (e.g. sand, earth). Transfer liquids to covered and labeled metal containers for recovery or disposal, or remove with inert absorbent. Use only non-sparking tools and appropriate PPE. Place absorbent diking materials in covered metal containers for disposal. Prevent contamination of sewers, streams, and groundwater with spilled material or used absorbent.

6.4. Reference to other sections

See Sections 8 and 13.

SECTION 7: Handling and storage

7.1. Precautions for safe handling

Precautions for safe handling : Do not handle until all safety precautions have been read and understood. For professional or industrial use only. Follow label instructions. Keep out of reach of children. Not for consumption. No smoking. Do not breathe vapors. Avoid contact with body. Turn off all pilot lights, flames, stoves, heaters, electric motors, welding equipment and other sources of ignition. Empty containers must not be washed and re-used for any purpose. Contact lens wearers must wear protective eye wear around chemical vapors and liquid. Wash hands thoroughly after handling. Flammable vapors may cause flash fire or ignite explosively. To prevent build-up of vapors, use adequate natural and/or mechanical ventilation (e.g. open all windows and doors to achieve cross ventilation). Containers may be hazardous when empty. Never use welding or cutting torch on or near container. Do not cut, drill, grind, or expose containers to heat, sparks, static electricity or other source of ignition. Explosion may occur causing injury or death.

7.2. Conditions for safe storage, including any incompatibilities

Storage conditions : Keep away from heat, hot surfaces, sparks, open flames and other ignition sources. No smoking. Store in a dry, cool and well-ventilated place. Keep container tightly closed. Avoid storing container directly on the floor or against an outside wall.

Special rules on packaging : Keep only in original container.

SECTION 8: Exposure controls/personal protection

8.1. Control parameters

Xylenes (o-, m-, p- isomers) (1330-20-7)		
ACGIH	ACGIH OEL TWA	221 mg/m³
ACGIH	ACGIH OEL TWA [ppm]	50 ppm
ACGIH	ACGIH OEL STEL	442 mg/m³
ACGIH	ACGIH OEL STEL [ppm]	100 ppm
ACGIH	Remark (ACGIH)	TLV® Basis: URT & eye irr; CNS impair. Notations: A4 (Not classifiable as a Human Carcinogen); BEI
ACGIH	Regulatory reference	ACGIH 2021
OSHA	OSHA PEL TWA [1]	435 mg/m³
OSHA	OSHA PEL TWA [2]	100 ppm
OSHA	OSHA PEL STEL [1]	655 mg/m³
OSHA	OSHA PEL STEL [2]	150 ppm
OSHA	Regulatory reference (US-OSHA)	OSHA Annotated Table Z-1

Ethylbenzene (100-41-4)		
ACGIH	ACGIH OEL TWA [ppm]	20 ppm
ACGIH	Remark (ACGIH)	TLV® Basis: URT irr; kidney dam (nephropathy); cochlear impair. Notations: A3 (Confirmed Animal Carcinogen with Unknown Relevance to Humans); BEI
ACGIH	Regulatory reference	ACGIH 2021
OSHA	OSHA PEL TWA [1]	435 mg/m³
OSHA	OSHA PEL TWA [2]	100 ppm
OSHA	OSHA PEL STEL [1]	545 mg/m³
OSHA	OSHA PEL STEL [2]	125 ppm
OSHA	Regulatory reference (US-OSHA)	OSHA Annotated Table Z-1

Methyl isobutyl ketone (108-10-1)		
ACGIH	ACGIH OEL TWA [ppm]	20 ppm
ACGIH	ACGIH OEL STEL [ppm]	75 ppm
OSHA	OSHA PEL TWA [1]	410 mg/m³
OSHA	OSHA PEL TWA [2]	100 ppm

Phenol, polymer with formaldehyde, glycidyl ether (28064-14-4)		
ACGIH	Remark (ACGIH)	OELs not established
OSHA	Remark (OSHA)	OELs not established

Oxirane, 2,2'-[(1-methylethylidene)bis(4,1-phenyleneoxymethylene)]bis-, homopolymer (25085-99-8)		
ACGIH	Remark (ACGIH)	OELs not established
OSHA	Remark (OSHA)	OELs not established

Benzene, 1-chloro-4-(trifluoromethyl)- (98-56-6)		
ACGIH	Remark (ACGIH)	OELs not established
OSHA	Remark (OSHA)	OELs not established

Alkyl (C12-14) glycidyl ether (68609-97-2)		
ACGIH	Remark (ACGIH)	OELs not established
OSHA	Remark (OSHA)	OELs not established

8.2. Appropriate engineering controls

Appropriate engineering controls : Provide adequate general and local exhaust ventilation. Use process enclosures, local exhaust ventilation, or other engineering controls to control airborne levels below recommended exposure limits. Use explosion-proof equipment with flammable materials. Ensure adequate ventilation, especially in confined areas.

8.3. Individual protection measures/Personal protective equipment

Personal protective equipment symbol(s):

Personal protective equipment:

Gloves. Protective goggles. Protective clothing. In case of inadequate ventilation wear respiratory protection.

Hand protection:

Use gloves chemically resistant to this material when prolonged or repeated contact could occur. Gloves should be classified under Standard EN 374 or ASTM F1296. Suggested glove materials are: Neoprene, Nitrile/butadiene rubber, Polyethylene, Ethyl vinyl alcohol laminate, PVC or vinyl. Suitable gloves for this specific application can be recommended by the glove supplier.

Eye protection:

Wear eye protection, including chemical splash goggles and a face shield when possibility exists for eye contact due to airborne particles.

Skin and body protection:

Wear long sleeves, and chemically impervious PPE/coveralls to minimize bodily exposure.

Respiratory protection:

Use NIOSH (or other equivalent national standard) -approved dust/particulate respirator. Where vapor, mist, or dust exceed PELs or other applicable OELs, use NIOSH-approved respiratory protective equipment.

SECTION 9: Physical and chemical properties

9.1. Information on basic physical and chemical properties

Physical state	:	Liquid
Appearance	:	Transparent liquid mixture
Color	:	Clear to straw yellow
Odor	:	Solvent-like
Odor threshold	:	No data available
pH	:	No data available
Melting point	:	No data available

Freezing point	: No data available
Boiling point	: No data available
Flash point	: > 31 °C (88 °F)
Relative evaporation rate (n-butyl acetate=1)	: > 1
Flammability (solid, gas)	: No data available
Vapor pressure	: No data available
Relative vapor density at 20 °C	: No data available
Relative density	: 1.132
Density	: 9.5 lb/gal ± 0.3 lb/gal
Solubility	: Water: Slight
Partition coefficient n-octanol/water (Log Pow)	: No data available
Auto-ignition temperature	: 500 °C (932 °F)
Decomposition temperature	: No data available
Viscosity, kinematic	: No data available
Viscosity, dynamic	: No data available
Explosive limits	: 0.9 to 10.5
Explosive properties	: No data available
Oxidising properties	: No data available

9.2. Other information

VOC content : 65 g/l max. (EPA Method 24 VOC) when mixed

SECTION 10: Stability and reactivity

10.1. Reactivity

No data available.

10.2. Chemical stability

Stable under recommended handling and storage conditions (see section 7).

10.3. Possibility of hazardous reactions

No data available.

10.4. Conditions to avoid

Strong oxidizing agents.

10.5. Incompatible materials

None known.

10.6. Hazardous decomposition products

Carbon monoxide. Carbon dioxide.

SECTION 11: Toxicological information

11.1. Information on toxicological effects

Acute toxicity (oral)	: Not classified
Acute toxicity (dermal)	: Not classified
Acute toxicity (inhalation)	: Not classified

Xylenes (o-, m-, p- isomers) (1330-20-7)	
LD50 oral rat	3500 mg/kg
LD50 dermal rabbit	12126 mg/kg bodyweight Animal: rabbit, Animal sex: male, Remarks on results: other:
LC50 Inhalation - Rat [ppm]	5922 ppm

Ethylbenzene (100-41-4)	
LD50 oral rat	3500 mg/kg
LD50 dermal rabbit	15400 mg/kg
LC50 Inhalation - Rat	17.2 mg/l/4h
LC50 Inhalation - Rat [ppm]	4000 ppm Source: ECHA, Harmonized classification of EU CLP

Methyl isobutyl ketone (108-10-1)	
LD50 oral rat	2080 mg/kg
LD50 dermal rabbit	3000 mg/kg

Benzene, 1-chloro-4-(trifluoromethyl)- (98-56-6)	
LD50 oral rat	13 g/kg
LD50 dermal rabbit	> 2 ml/kg
LC50 Inhalation - Rat	33 mg/l/4h

Alkyl (C12-14) glycidyl ether (68609-97-2)	
LD50 oral rat	17100 mg/kg

Skin corrosion/irritation	:	Causes skin irritation.
Serious eye damage/irritation	:	Causes serious eye irritation.
Respiratory or skin sensitisation	:	May cause an allergic skin reaction.
Germ cell mutagenicity	:	Not classified
Carcinogenicity	:	Suspected of causing cancer.

Ethylbenzene (100-41-4)	
IARC group	2B - Possibly carcinogenic to humans

Methyl isobutyl ketone (108-10-1)	
IARC group	2B - Possibly carcinogenic to humans

Reproductive toxicity	:	Not classified
STOT-single exposure	:	Not classified
STOT-repeated exposure	:	Not classified
Aspiration hazard	:	Not classified
Viscosity, kinematic	:	No data available
Symptoms/effects	:	Causes skin irritation. May cause an allergic skin reaction. Causes serious eye irritation. Suspected of causing cancer.
Symptoms/effects after inhalation	:	May cause respiratory irritation.
Symptoms/effects after skin contact	:	Causes skin irritation. May cause an allergic skin reaction.
Symptoms/effects after eye contact	:	Causes serious eye irritation.
Symptoms/effects after ingestion	:	May cause gastrointestinal irritation.
Chronic symptoms	:	Suspected of causing cancer.

SECTION 12: Ecological information

12.1. Toxicity

Ecology - general	:	No information available.
Hazardous to the aquatic environment, short-term (acute)	:	Not classified
Hazardous to the aquatic environment, long-term (chronic)	:	Toxic to aquatic life with long lasting effects.

12.2. Persistence and degradability

No additional information available

12.3. Bioaccumulative potential

No additional information available

12.4. Mobility in soil

No additional information available

12.5. Other adverse effects

No additional information available

SECTION 13: Disposal considerations

13.1. Disposal methods

Waste treatment methods	:	Do not discharge to public wastewater systems without permit of pollution control authorities. No discharge to surface waters is allowed without an NPDES permit.
Product/Packaging disposal recommendations	:	Dispose in a safe manner in accordance with local/national regulations. Do not allow the product to be released into the environment.

SECTION 14: Transport information

Department of Transportation (DOT)

In accordance with DOT

Transport document description (DOT)	:	UN1866 Resin solution (contains: Methyl isobutyl ketone, PCBTF), 3, III
UN-No.(DOT)	:	UN1866
Proper Shipping Name (DOT)	:	Resin solution
Class (DOT)	:	3 - Class 3 - Flammable and combustible liquid 49 CFR 173.120
Packing group (DOT)	:	III - Minor Danger
Hazard labels (DOT)	:	3 - Flammable liquid

Dangerous for the environment	:	Yes
Marine pollutant	:	Yes

DOT Quantity Limitations Passenger aircraft/rail (49 CFR 173.27)	:	60 L
DOT Quantity Limitations Cargo aircraft only (49 CFR 175.75)	:	220 L
DOT Vessel Stowage Location	:	A - The material may be stowed ‘‘on deck’’ or ‘‘under deck’’ on a cargo vessel and on a passenger vessel.
Emergency Response Guide (ERG) Number	:	127
Other information	:	No supplementary information available.

Transport by sea (IMDG)

Transport document description (IMDG)	:	UN 1866 RESIN SOLUTION (contains: Methyl isobutyl ketone, PCBTF), 3, III
UN-No. (IMDG)	:	1866
Proper Shipping Name (IMDG)	:	RESIN SOLUTION
Class (IMDG)	:	3 - Flammable liquids
Packing group (IMDG)	:	III - substances presenting low danger
Limited quantities (IMDG)	:	5 L
Marine pollutant	:	Yes

Air transport (IATA)

Transport document description (IATA)	:	UN 1866 Resin solution (contains: Methyl isobutyl ketone, PCBTF), 3, III
UN-No. (IATA)	:	1866
Proper Shipping Name (IATA)	:	Resin solution
Class (IATA)	:	3 - Flammable Liquids
Packing group (IATA)	:	III - Minor Danger

SECTION 15: Regulatory information

15.1. US Federal regulations

ELASTO-POXY PRIMER VOC (A-Component)	
All chemical substances in this product are listed as “Active” in the EPA (Environmental Protection Agency) “TSCA Inventory Notification (Active-Inactive) Requirements Rule” (“the Final Rule”) of Feb. 2019, as amended Feb. 2021, or are otherwise exempt or regulated by other agencies such as FDA or FIFRA	
SARA Section 311/312 Hazard Classes	Physical hazard - Flammable (gases, aerosols, liquids, or solids) Health hazard - Skin corrosion or Irritation Health hazard - Serious eye damage or eye irritation Health hazard - Respiratory or skin sensitization Health hazard - Carcinogenicity

15.2. International regulations

No additional information available

15.3. US State regulations

⚠ **WARNING:** This product can expose you to Methyl isobutyl ketone, which is known to the State of California to cause cancer and birth defects or other reproductive harm. For more information go to www.P65Warnings.ca.gov.

Component	Carcinogenicity	Developmental toxicity	Reproductive toxicity male	Reproductive toxicity female	No significant risk level (NSRL)	Maximum allowable dose level (MADL)
Ethylbenzene (100-41-4)	X				54 µg/day (inhalation); 41 µg/day (oral)	
Methyl isobutyl ketone (108-10-1)	X	X				
Benzene, 1-chloro-4-(trifluoromethyl)- (98-56-6)	X					

Component	State or local regulations
Xylenes (o-, m-, p- isomers) (1330-20-7)	U.S. - New Jersey - Right to Know Hazardous Substance List; U.S. - Pennsylvania - RTK (Right to Know) List; U.S. - Massachusetts - Right To Know List
Ethylbenzene (100-41-4)	U.S. - New Jersey - Right to Know Hazardous Substance List; U.S. - Pennsylvania - RTK (Right to Know) List; U.S. - Massachusetts - Right To Know List
Methyl isobutyl ketone (108-10-1)	U.S. - Massachusetts - Right To Know List; U.S. - New Jersey - Right to Know Hazardous Substance List; U.S. - Pennsylvania - RTK (Right to Know) - Environmental Hazard List

SECTION 16: Other information

Other information : Author: EMA.

NFPA health hazard : 2 - Materials that, under emergency conditions, can cause temporary incapacitation or residual injury.

NFPA fire hazard : 2 - Materials that must be moderately heated or exposed to relatively high ambient temperatures before ignition can occur.

NFPA reactivity : 0 - Material that in themselves are normally stable, even under fire conditions.

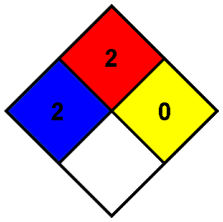

HMIS Hazard Rating

Health : 2*

* - Chronic (long-term) health effects may result from repeated overexposure

Flammability : 2

Physical : 0

This information is based on our current knowledge and is intended to describe the product for the purposes of health, safety and environmental requirements only. It should not therefore be construed as guaranteeing any specific property of the product.

ELASTO-POXY PRIMER VOC (B-Component)

Safety Data Sheet

according to Federal Register / Vol. 77, No. 58 / Monday, March 26, 2012 / Rules and Regulations

Issue date: 09/10/2021 Version: 1.0

SECTION 1: Identification

1.1. Identification

Product form : Mixture

Product name : ELASTO-POXY PRIMER VOC (B-Component)

1.2. Recommended use and restrictions on use

No additional information available

1.3. Supplier

ITW Polymers and Sealants NA
12055 Cutten Road
Houston, TX 77066
T 972-438-9111

1.4. Emergency telephone number

Emergency number : CHEMTREC (US Transportation): (800) 424-9300 International: +1 (703) 527-3887

SECTION 2: Hazard(s) identification

2.1. Classification of the substance or mixture

GHS-US classification

Flammable liquids, Category 3	H226
Skin corrosion/irritation, Category 2	H315
Serious eye damage/eye irritation, Category 1	H318
Respiratory sensitisation, Category 1	H334
Skin sensitisation, Category 1	H317
Hazardous to the aquatic environment - Chronic Hazard, Category 2	H411

2.2. GHS Label elements, including precautionary statements

GHS US labelling

Hazard pictograms (GHS US) :

Signal word (GHS US) : Danger

Hazard statements (GHS US) : H226 - Flammable liquid and vapor.
H315 - Causes skin irritation.
H317 - May cause an allergic skin reaction.
H318 - Causes serious eye damage.
H334 - May cause allergy or asthma symptoms or breathing difficulties if inhaled.
H411 - Toxic to aquatic life with long lasting effects.

Precautionary statements (GHS US) : P210 - Keep away from heat, hot surfaces, sparks, open flames and other ignition sources. No smoking.
P233 - Keep container tightly closed.
P240 - Ground/Bond container and receiving equipment.
P241 - Use explosion-proof electrical/ventilating/lighting equipment.
P242 - Use only non-sparking tools.
P243 - Take precautionary measures against static discharge.
P261 - Avoid breathing mist, vapors, spray.
P264 - Wash hands, forearms and face thoroughly after handling.
P272 - Contaminated work clothing must not be allowed out of the workplace.
P273 - Avoid release to the environment.
P280 - Wear protective gloves, eye protection, face protection, protective clothing
P284 - In case of inadequate ventilation, wear respiratory protection.
P302+P352 - If on skin: Wash with plenty of soap and water.
P303+P361+P353 - IF ON SKIN (or hair): Take off immediately all contaminated clothing. Rinse skin with water/shower
P304+P341 - IF INHALED: If breathing is difficult, remove person to fresh air and keep comfortable for breathing
P305+P351+P338 - IF IN EYES: Rinse cautiously with water for several minutes. Remove contact lenses, if present and easy to do. Continue rinsing
P310 - Immediately call poison center/doctor/...

P333+P313 - If skin irritation or rash occurs: Get medical advice/attention.
P342+P311 - If experiencing respiratory symptoms: Call a poison center or doctor.
P362+P364 - Take off contaminated clothing and wash it before reuse.
P370+P378 - In case of fire: Use media other than water to extinguish.
P391 - Collect spillage.
P403+P235 - Store in a well-ventilated place. Keep cool.
P501 - Dispose of contents/container to a licensed hazardous-waste disposal contractor or collection site except for empty clean containers which can be disposed of as non-hazardous waste.

2.3. Other hazards which do not result in classification

No additional information available

2.4. Unknown acute toxicity (GHS US)

Not applicable

SECTION 3: Composition/information on ingredients

3.1. Substances

Not applicable

3.2. Mixtures

Name	Product identifier	%
Fatty acids, C18-unsaturated, dimers, polymers with tall-oil fatty acids and triethylenetetramine	(CAS-No.) 68082-29-1	15 – 40
Benzene, 1-chloro-4-(trifluoromethyl)-	(CAS-No.) 98-56-6	10 – 30
2,4,6-Tri(dimethylaminomethyl)phenol	(CAS-No.) 90-72-2	3 – 7
Diethylenetriamine	(CAS-No.) 111-40-0	1 – 5
Ethylenediamine	(CAS-No.) 107-15-3	0.5 – 1.5
Triethylenetetramine	(CAS-No.) 112-24-3	0.5 – 1.5
Fatty acids, tall-oil, compounds with oleylamine	(CAS-No.) 85711-55-3	0.1 – 1

*** In accordance with paragraph (i) of the OSHA Hazard Communication Standard (29 CFR §1910.1200), the specific chemical identity or exact weight % has been withheld as a trade secret.**

SECTION 4: First-aid measures

4.1. Description of first aid measures

First-aid measures general : If exposed or concerned, get medical attention/advice. Show this safety data sheet to the doctor in attendance. Wash contaminated clothing before re-use. Never give anything to an unconscious person.

First-aid measures after inhalation : IF INHALED: Remove to fresh air and keep at rest in a position comfortable for breathing. Get medical attention. If breathing is difficult, supply oxygen. If breathing has stopped, give artificial respiration.

First-aid measures after skin contact : IF ON SKIN (or clothing): Remove affected clothing and wash all exposed skin with water for at least 15 minutes. If irritation develops or persists, get medical attention immediately.

First-aid measures after eye contact : IF IN EYES: Immediately flush with plenty of water for at least 15 minutes. Remove contact lenses if present and easy to do so. Get medical attention immediately. Continue rinsing.

First-aid measures after ingestion : IF SWALLOWED: rinse mouth thoroughly. Do not induce vomiting without advice from poison control center. Get medical attention if you feel unwell.

4.2. Most important symptoms and effects (acute and delayed)

Symptoms/effects : Causes skin irritation. May cause an allergic skin reaction. Causes serious eye damage. May cause allergy or asthma symptoms or breathing difficulties if inhaled.

Symptoms/effects after inhalation : May cause allergy or asthma symptoms or breathing difficulties if inhaled.

Symptoms/effects after skin contact : Causes skin irritation. May cause an allergic skin reaction.

Symptoms/effects after eye contact : Causes serious eye damage.

Symptoms/effects after ingestion : May cause gastrointestinal irritation.

Chronic symptoms : May cause an allergic skin reaction. May cause allergy or asthma symptoms or breathing difficulties if inhaled.

4.3. Immediate medical attention and special treatment, if necessary

No additional information available

SECTION 5: Fire-fighting measures

5.1. Suitable (and unsuitable) extinguishing media

Suitable extinguishing media	:	Carbon dioxide. Foam. Dry powder. Sand.
Unsuitable extinguishing media	:	Water may be unsuitable as an extinguishing media, but helpful in keeping adjacent containers cool.

5.2. Specific hazards arising from the chemical

Fire hazard	:	Flammable liquid and vapor.
Explosion hazard	:	Avoid fire, sparks, static electricity and hot surfaces. Liquid readily evaporates at room/ambient temperature. Vapors are invisible, flammable, heavier than air, and may accumulate in low areas and spread long distances. Distant ignition and flashback are possible.
Reactivity	:	No data available.

5.3. Special protective equipment and precautions for fire-fighters

Firefighting instructions	:	Use cold water spray to cool fire-exposed containers to minimize risk of rupture. Exercise caution when fighting any chemical fire. Do not dispose of fire-fighting water in the environment. Prevent human exposure to fire, fumes, smoke and products of combustion.
Protection during firefighting	:	Do not enter fire area without proper protective equipment, including respiratory protection.
Other information	:	Avoid smoke inhalation.

SECTION 6: Accidental release measures

6.1. Personal precautions, protective equipment and emergency procedures

General measures	:	Evacuate area. Keep upwind. Ventilate area. Spill should be handled by trained cleaning personnel properly equipped with respiratory and eye protection.

6.1.1. For non-emergency personnel

Protective equipment	:	Wear Protective equipment as described in Section 8.
Emergency procedures	:	Evacuate unnecessary personnel.

6.1.2. For emergency responders

Protective equipment	:	Wear suitable protective clothing, gloves and eye or face protection.

6.2. Environmental precautions

Prevent entry to sewers and public waters. Notify authorities if product enters sewers or public waters. Avoid release to the environment.

6.3. Methods and material for containment and cleaning up

For containment/cleaning up	:	SMALL SPILL: Dike area to contain spill. Take precautions as necessary to prevent contamination of ground and surface waters. Recover spilled material on absorbent, such as sawdust or vermiculite, and sweep into closed containers for disposal. After all visible traces, including ignitable vapors, have been removed, thoroughly wet vacuum the area. Do not flush to sewer. If area of spill is porous, remove as much contaminated earth and gravel, etc. as necessary and place in closed containers for disposal. Only those persons who are adequately trained, authorized, and wearing the required personal protective equipment (PPE) should participate in spill response and clean-up. LARGE SPILL: Keep spectators away. Only those persons who are adequately trained, authorized and wearing the required personal protective equipment (PPE) should participate in spill response and clean-up. Ventilate the area by natural means or by explosion proof means (i.e. fans). Know and prepare for spill response before using or handling this product. Eliminate all ignition sources (flames, hot surfaces, portable heaters and sources of electrical, static, or frictional sparks). Dike and contain spill with inert material (e.g. sand, earth). Transfer liquids to covered and labeled metal containers for recovery or disposal, or remove with inert absorbent. Use only non-sparking tools and appropriate PPE. Place absorbent diking materials in covered metal containers for disposal. Prevent contamination of sewers, streams, and groundwater with spilled material or used absorbent.

6.4. Reference to other sections

See Sections 8 and 13.

SECTION 7: Handling and storage

7.1. Precautions for safe handling

Precautions for safe handling : Do not handle until all safety precautions have been read and understood. For professional or industrial use only. Follow label instructions. Keep out of reach of children. Not for consumption. No smoking. Do not breathe vapors. Avoid contact with body. Turn off all pilot lights, flames, stoves, heaters, electric motors, welding equipment and other sources of ignition. Empty containers must not be washed and re-used for any purpose. Contact lens wearers must wear protective eye wear around chemical vapors and liquid. Wash hands thoroughly after handling. Flammable vapors may cause flash fire or ignite explosively. To prevent build-up of vapors, use adequate natural and/or mechanical ventilation (e.g. open all windows and doors to achieve cross ventilation). Containers may be hazardous when empty. Never use welding or cutting torch on or near container. Do not cut, drill, grind, or expose containers to heat, sparks, static electricity or other source of ignition. Explosion may occur causing injury or death.

7.2. Conditions for safe storage, including any incompatibilities

Storage conditions : Keep away from heat, hot surfaces, sparks, open flames and other ignition sources. No smoking. Store in a dry, cool and well-ventilated place. Keep container tightly closed.

Special rules on packaging : Keep only in original container.

SECTION 8: Exposure controls/personal protection

8.1. Control parameters

Diethylenetriamine (111-40-0)		
ACGIH	ACGIH OEL TWA [ppm]	1 ppm
OSHA	OSHA PEL TWA [1]	4 mg/m³
OSHA	OSHA PEL TWA [2]	1 ppm

Ethylenediamine (107-15-3)		
ACGIH	ACGIH OEL TWA [ppm]	10 ppm
OSHA	OSHA PEL TWA [1]	25 mg/m³
OSHA	OSHA PEL TWA [2]	10 ppm

Triethylenetetramine (112-24-3)		
ACGIH	Remark (ACGIH)	OELs not established
OSHA	Remark (OSHA)	OELs not established

Fatty acids, C18-unsaturated, dimers, polymers with tall-oil fatty acids and triethylenetetramine (68082-29-1)		
ACGIH	Remark (ACGIH)	OELs not established
OSHA	Remark (OSHA)	OELs not established

2,4,6-Tri(dimethylaminomethyl)phenol (90-72-2)		
ACGIH	Remark (ACGIH)	OELs not established
OSHA	Remark (OSHA)	OELs not established

Fatty acids, tall-oil, compounds with oleylamine (85711-55-3)		
OSHA	Remark (OSHA)	OELs not established

Benzene, 1-chloro-4-(trifluoromethyl)- (98-56-6)		
ACGIH	Remark (ACGIH)	OELs not established
OSHA	Remark (OSHA)	OELs not established

8.2. Appropriate engineering controls

Appropriate engineering controls : Provide adequate general and local exhaust ventilation. Use process enclosures, local exhaust ventilation, or other engineering controls to control airborne levels below recommended exposure limits. Use explosion-proof equipment with flammable materials. Ensure adequate ventilation, especially in confined areas.

8.3. Individual protection measures/Personal protective equipment

Personal protective equipment symbol(s):

Personal protective equipment:

Gloves. Protective goggles. Protective clothing. In case of inadequate ventilation wear respiratory protection.

Hand protection:

Use gloves chemically resistant to this material when prolonged or repeated contact could occur. Gloves should be classified under Standard EN 374 or ASTM F1296. Suggested glove materials are: Neoprene, Nitrile/butadiene rubber, Polyethylene, Ethyl vinyl alcohol laminate, PVC or vinyl. Suitable gloves for this specific application can be recommended by the glove supplier.

Eye protection:

Wear eye protection, including chemical splash goggles and a face shield when possibility exists for eye contact due to airborne particles.

Skin and body protection:

Wear long sleeves, and chemically impervious PPE/coveralls to minimize bodily exposure.

Respiratory protection:

Use NIOSH (or other equivalent national standard) -approved dust/particulate respirator. Where vapor, mist, or dust exceed PELs or other applicable OELs, use NIOSH-approved respiratory protective equipment.

SECTION 9: Physical and chemical properties

9.1. Information on basic physical and chemical properties

Physical state	:	Liquid
Appearance	:	Liquid mixture
Color	:	Amber
Odor	:	Mild, sweet
Odor threshold	:	No data available
pH	:	No data available
Melting point	:	No data available
Freezing point	:	No data available
Boiling point	:	No data available
Flash point	:	43.3 °C (110 °F)
Relative evaporation rate (n-butyl acetate=1)	:	> 1
Flammability (solid, gas)	:	No data available
Vapor pressure	:	No data available
Relative vapor density at 20 °C	:	No data available
Relative density	:	1.015
Density	:	8.4 – 8.6 lb/gal
Solubility	:	Water: Slight
Partition coefficient n-octanol/water (Log Pow)	:	No data available
Auto-ignition temperature	:	No data available
Decomposition temperature	:	No data available
Viscosity, kinematic	:	No data available
Viscosity, dynamic	:	No data available
Explosive limits	:	No data available
Explosive properties	:	No data available
Oxidising properties	:	No data available

9.2. Other information

VOC content	:	65 g/l EPA Method 24 VOC

SECTION 10: Stability and reactivity

10.1. Reactivity

No data available.

10.2. Chemical stability

Stable under recommended handling and storage conditions (see section 7).

10.3. Possibility of hazardous reactions

None known.

10.4. Conditions to avoid

Strong acids. Strong bases. Strong oxidizing agents.

10.5. Incompatible materials

None known.

10.6. Hazardous decomposition products

Thermal decomposition and burning will produce toxic fume, carbon monoxide, carbon dioxide and nitrogen oxides.

SECTION 11: Toxicological information

11.1. Information on toxicological effects

Acute toxicity (oral) : Not classified

Acute toxicity (dermal) : Not classified

Acute toxicity (inhalation) : Not classified

Diethylenetriamine (111-40-0)	
LD50 oral rat	1080 mg/kg
LC50 Inhalation - Rat	70 mg/l/4h (vapor)

Ethylenediamine (107-15-3)	
LD50 oral rat	637 mg/kg
LD50 dermal rabbit	560 mg/kg
LC50 Inhalation - Rat	4916 – 9832 mg/m³ 8h

Triethylenetetramine (112-24-3)	
LD50 oral rat	2500 mg/kg

2,4,6-Tri(dimethylaminomethyl)phenol (90-72-2)	
LD50 oral rat	1000 mg/kg
LD50 dermal rat	1280 mg/kg

Benzene, 1-chloro-4-(trifluoromethyl)- (98-56-6)	
LD50 oral rat	13 g/kg
LD50 dermal rabbit	> 2 ml/kg
LC50 Inhalation - Rat	33 mg/l/4h

Butyl cellosolve (111-76-2)	
LD50 oral rat	470 mg/kg
LD50 dermal rat	> 2000 mg/kg bodyweight Animal: rat, Guideline: OECD Guideline 402 (Acute Dermal Toxicity)
LD50 dermal rabbit	435 mg/kg
LC50 Inhalation - Rat	450 mg/l/4h

Skin corrosion/irritation : Causes skin irritation.

Serious eye damage/irritation : Causes serious eye damage.

Respiratory or skin sensitisation : May cause allergy or asthma symptoms or breathing difficulties if inhaled. May cause an allergic skin reaction.

Germ cell mutagenicity : Not classified

Carcinogenicity : Not classified

Benzene (71-43-2)	
IARC group	1 - Carcinogenic to humans
National Toxicology Program (NTP) Status	Known Human Carcinogens

Reproductive toxicity : Not classified

STOT-single exposure : Not classified

STOT-repeated exposure	:	Not classified
Aspiration hazard	:	Not classified
Viscosity, kinematic	:	No data available
Symptoms/effects	:	Causes skin irritation. May cause an allergic skin reaction. Causes serious eye damage. May cause allergy or asthma symptoms or breathing difficulties if inhaled.
Symptoms/effects after inhalation	:	May cause allergy or asthma symptoms or breathing difficulties if inhaled.
Symptoms/effects after skin contact	:	Causes skin irritation. May cause an allergic skin reaction.
Symptoms/effects after eye contact	:	Causes serious eye damage.
Symptoms/effects after ingestion	:	May cause gastrointestinal irritation.
Chronic symptoms	:	May cause an allergic skin reaction. May cause allergy or asthma symptoms or breathing difficulties if inhaled.

SECTION 12: Ecological information

12.1. Toxicity

Ecology - general	:	No information available.
Hazardous to the aquatic environment, short-term (acute)	:	Not classified
Hazardous to the aquatic environment, long-term (chronic)	:	Toxic to aquatic life with long lasting effects.

12.2. Persistence and degradability

No additional information available

12.3. Bioaccumulative potential

No additional information available

12.4. Mobility in soil

No additional information available

12.5. Other adverse effects

No additional information available

SECTION 13: Disposal considerations

13.1. Disposal methods

Waste treatment methods	:	Do not discharge to public wastewater systems without permit of pollution control authorities. No discharge to surface waters is allowed without an NPDES permit.
Product/Packaging disposal recommendations	:	Dispose in a safe manner in accordance with local/national regulations. Do not allow the product to be released into the environment.

SECTION 14: Transport information

Department of Transportation (DOT)

In accordance with DOT

This mixture meets the requirements for 49 CFR 173.150(f)(1)(2) exemptions and the outer packages of this material would not require transportation labeling.

Transport by sea (IMDG)

Transport document description (IMDG)	:	UN 1866 RESIN SOLUTION (contains: PCBTF, Ethylenediamine), 3, III
UN-No. (IMDG)	:	1866
Proper Shipping Name (IMDG)	:	RESIN SOLUTION
Class (IMDG)	:	3 - Flammable liquids
Packing group (IMDG)	:	III - substances presenting low danger
Limited quantities (IMDG)	:	5 L
Marine pollutant	:	Yes

Air transport (IATA)

Transport document description (IATA)	:	UN 1866 Resin solution (contains: PCBTF, Ethylenediamine), 3, III
UN-No. (IATA)	:	1866
Proper Shipping Name (IATA)	:	Resin solution
Class (IATA)	:	3 - Flammable Liquids
Packing group (IATA)	:	III - Minor Danger

SECTION 15: Regulatory information

15.1. US Federal regulations

ELASTO-POXY PRIMER VOC (B-Component)	
All chemical substances in this product are listed as “Active” in the EPA (Environmental Protection Agency) “TSCA Inventory Notification (Active-Inactive) Requirements Rule” (“the Final Rule”) of Feb. 2019, as amended Feb. 2021, or are otherwise exempt or regulated by other agencies such as FDA or FIFRA	
SARA Section 311/312 Hazard Classes	Physical hazard - Flammable (gases, aerosols, liquids, or solids) Health hazard - Skin corrosion or Irritation Health hazard - Respiratory or skin sensitization Health hazard - Serious eye damage or eye irritation

15.2. International regulations

No additional information available

15.3. US State regulations

⚠ **WARNING:** This product can expose you to Benzene, which is known to the State of California to cause cancer and birth defects or other reproductive harm. For more information go to www.P65Warnings.ca.gov.

Component	Carcinogenicity	Developmental toxicity	Reproductive toxicity male	Reproductive toxicity female	No significant risk level (NSRL)	Maximum allowable dose level (MADL)
Benzene, 1-chloro-4-(trifluoromethyl)- (98-56-6)	X					
Benzene (71-43-2)	X	X	X		6.4 µg/day (oral); 13 µg/day (inhalation)	24 µg/day (oral); 49 µg/day (inhalation)
Toluene (108-88-3)		X				7000 µg/day
Methyl alcohol (67-56-1)		X				47000 µg/day (inhalation); 23,000 µg/day (oral)

Component	State or local regulations
Diethylenetriamine (111-40-0)	U.S. - New Jersey - Right to Know Hazardous Substance List; U.S. - Massachusetts - Right To Know List; U.S. - Pennsylvania - RTK (Right to Know) List
Ethylenediamine (107-15-3)	U.S. - Massachusetts - Right To Know List; U.S. - New Jersey - Right to Know Hazardous Substance List; U.S. - Pennsylvania - RTK (Right to Know) List
Triethylenetetramine (112-24-3)	U.S. - Massachusetts - Right To Know List; U.S. - New Jersey - Right to Know Hazardous Substance List; U.S. - Pennsylvania - RTK (Right to Know) List
Stoddard solvent (8052-41-3)	U.S. - New Jersey - Right to Know Hazardous Substance List; U.S. - Pennsylvania - RTK (Right to Know) List; U.S. - Massachusetts - Right To Know List
Butyl cellosolve (111-76-2)	U.S. - Massachusetts - Right To Know List; U.S. - New Jersey - Right to Know Hazardous Substance List; U.S. - Pennsylvania - RTK (Right to Know) List
Benzene, 1,2,4-trimethyl- (95-63-6)	U.S. - New Jersey - Right to Know Hazardous Substance List; U.S. - Pennsylvania - RTK (Right to Know) List

Component	State or local regulations
Benzene (71-43-2)	U.S. - New Jersey - Right to Know Hazardous Substance List; U.S. - Pennsylvania - RTK (Right to Know) List; U.S. - Massachusetts - Right To Know List
Methyl alcohol (67-56-1)	U.S. - New Jersey - Right to Know Hazardous Substance List; U.S. - Pennsylvania - RTK (Right to Know) List; U.S. - Pennsylvania - RTK (Right to Know) - Environmental Hazard List; U.S. - Massachusetts - Right To Know List
Toluene (108-88-3)	U.S. - New Jersey - Right to Know Hazardous Substance List; U.S. - Pennsylvania - RTK (Right to Know) List; U.S. - Massachusetts - Right To Know List

SECTION 16: Other information

Other information : Author: EMA.

NFPA health hazard : 3 - Materials that, under emergency conditions, can cause serious or permanent injury.

NFPA fire hazard : 2 - Materials that must be moderately heated or exposed to relatively high ambient temperatures before ignition can occur.

NFPA reactivity : 0 - Material that in themselves are normally stable, even under fire conditions.

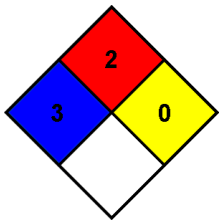

HMIS Hazard Rating

Health : 3*

* - Chronic (long-term) health effects may result from repeated overexposure

Flammability : 2

Physical : 0

This information is based on our current knowledge and is intended to describe the product for the purposes of health, safety and environmental requirements only. It should not therefore be construed as guaranteeing any specific property of the product.

PERMATHANE®

SM7108
POLYURETHANE SEALANT

TECHNICAL DATA SHEET

PRODUCT DESCRIPTION:
Permathane® SM7108 is a one component, gun-grade, non-sag, moisture-cure polyurethane sealant designed to skin and cure rapidly. This high performance product is designed with outstanding UV resistance and long term durability. Excellent adhesion is obtained on a wide variety of materials.

ADVANTAGE:
- Accommodates ±25% joint movement
- Permanently flexible, excellent weatherability
- Easy to gun – Easy to tool
- Cures to a tough, durable, elastic consistency with excellent cut and tear resistance
- Paintable – non-sticky after cure
- VOC Compliant
- Primerless adhesion to substrates including galvanized steel, aluminum, concrete, glass, Galvalume®, Zincalume®, Kynar 500®, wood, vinyl and fiberglass.

TYPICAL USES:
Permathane® SM7108 is designed to seal construction joint details.
- Waterproof rivet seams and roof rails
- Perimeter joints around windows and doors
- Bonding sidewalls in RV's and trucks
- Sealing vehicle bodies, cab construction, underbody compartments and roofing
- Sealing corner moldings, fabricated roof-lap seams, bumper assemblies and body-to-cab joints in motor homes
- PCC holding tanks, PCC cooling tower basins
- Sealing door hinges, skylights and portholes
- Air conditioning equipment, flashing and gutters
- Masonry Expansion joints
- Between construction materials of dissimilar expansion coefficients
- Sealing in association with building/lath papers an

SPECIFICATION COMPLIANCE:
- TT-S-00230 C (Type II) Class A,
- Non-sag, One-Component
- ASTM C 920 Type S, Grade NS, Class 25, Use-NT, A, M, G and O
- Commercial item Specification A-A-1556A
- AAMA 808.3 (Exterior Sealing Compound)
- USDA acceptable for use in meat and poultry areas

TYPICAL PROPERTIES:

Property	Typical Value	Test Method
Peel Adhesion:	15 pli minimum	ASTM C794
Tensile Maximum:	300 psi (2.07 N/mm^2)	ASTM D412
Elongation:	500-600%	ASTM D412
Sag:	None	ASTM C639
Hardness (Shore A):	30-40	ASTM C 661
Service Temperature Range:	-40°F to 200°F, (-40°C to 93.3°C)	
Water Resistance:	Passes	AAMA 800
VOC	43.1 g/L	EPA Method 24
Flash Point:	232°F (111.11°C)	ASTM D3278
Shelf Life:	12 months when stored at or below 80°F.	
Skin Time:	2-4 hours	
Cure Time:	24-48 hours	
* Skin and cure times are dependent on temperature, humidity, and porosity of the substrates. The above times are based on a ¼" bead at 75°F and 50% relative humidity. Low humidity, cooler temperature and non-porous substrates will lengthen these times.		

FOR ADHESION:
Due to the number and types of substrates available, pretesting for adhesion is recommended. Testing on samples of materials to which it will be applied is intended to eliminate potential field problems and help determine proper surface preparation.

APPLICATION:
Surface Preparation:
- Surfaces must be clean, dry and free of oil or grease. Concrete and masonry surfaces must be free of foreign material, contaminants, water repellents, form oils and laitance.
- Stone surfaces must be cohesively sound and free of contaminants. Granite, limestone, marble and sandstone must be pre-tested for adhesion prior to sealant installation.
- Mill finish aluminum may contain an invisible oil film or oxide. Clean with a good degreasing solvent such as xylene or toluene.
- Many high-performance coatings or unusual surface treatments may require abrasion of the surface with steel wool or fine emery paper during preparation. In cases where doubt exists, contact ITW Polymers Sealants North America, Inc. technical service for recommendations.

Joint Design:
- Recommended joint width is ¼" to 1". Sealant depth should not exceed joint width, and in case, should depth be greater than ½" or less than ¼"
- Use of closed cell polyethylene backer-rod approximately 25% larger than the width of the joint is recommended for deep joints. A bond-breaker film

should be used in shallow joints to prevent three-sided adhesion.

- Do not puncture or prime the backer-rod.

Priming:

- It is expected that SM7108 will adhere and perform in uncontaminated joints with most common substrates, without the use of a primer.
- Joints subjected to intermittent immersion or vertical joints subjected to rain should perform without the need of a primer.
- Priming of masonry or other porous joints is recommended only if the joints will be subjected to prolonged or continuous immersion.

APPLICATION LIMITATIONS:

- SM7108 must not be applied to frost-bearing surfaces or if temperature will be below freezing within 24 hours.
- Tooling techniques using solvents or soapy solutions are not recommended.
- All surfaces must be evaluated for adhesion prior to product acceptance.
- The suitability of this product, for each intended use, must be determined by the purchaser prior to acceptance.

Not recommended for:

a) Unprimed masonry joints that will be subjected to continuous water immersion.
b) Joints that are contaminated with grease, wax, corrosion, bitumen or cement laitance.
c) Horizontal joints in floors or decks where physical abuse is encountered.
d) Special architectural finishes without proper testing.

TOOLING:

Tooling of freshly applied sealant should be done in one continuous stroke. Tool the sealant with adequate pressure to spread the sealant against the back-up material and onto the joint surfaces. Excess sealant should be dry-wiped from all surfaces while still uncured. If joint surfaces have been masked, remove masking tape immediately after tooling. Cured sealant is very difficult to remove.

CLEAN UP:

Immediately remove all excess sealant smears adjacent to the joint with xylene, toluene or methyl ethyl ketone. Tools and application equipment may also be cleaned with the same solvents.

Note: The use of these solvents (or other solvents) may be hazardous to your health. Use only in well ventilated areas. KEEP AWAY FROM OPEN FLAME. Read all labeling before use. Follow solvent manufacture's recommendations and instructions for safe handling.

PRECAUTIONS:

If this product is used in direct contact or in close proximity with any other sealant or elastomer, a compatibility test must be conducted by the purchaser or user prior to use. When applied in close proximity, neutral cure silicones will prevent SM7108 from curing. There will be no problem if either sealant is applied and allowed to cure prior to the application of the other. Use caution if applying the silicone first since SM7100 will not adhere to silicone or its residue.

Avoid skin and eye contact. On contact, uncured sealant could cause irritation to the skin and eyes. In case of eye contact, flush eyes with warm water for 15 minutes, call a physician. For skin contact remove sealant with a paper towel. If swallowed, do not induce vomiting, call a physician. KEEP OUT OF REACH OF CHILDREN. This product is manufactured for industrial use only.

FIRST AID:

KEEP OUT OF REACH OF CHILDREN.

Avoid skin and eye contact. Avoid breathing of direct concentrated vapors. Use with adequate ventilation. In the case of eye contact flush eyes with warm water for 15 minutes, call a physician. For skin contact, remove sealant with a paper towel. If swallowed do not incuse vomiting, call a physician. This product is manufactured for professional and industrial use only. Refer to the Safety Data Sheet (SDS) for further information. For medical emergency only call ChemTrac 1800-424-9300

Galvalume is a registered trademark of BIEC International, Inc. Kynar 500 is a registered trademark of Arkema, Inc. Zincalume is a registered trademark of BlueScope Steel Limited.

EXCLUSION OF WARRANTIES:

AS TO THE HEREIN DESCRIBED MATERIALS, ITW POLYMERS SEALANTS NORTH AMERICA, INC. MAKES NO WARRANTIES WHETHER EXPRESSED OR IMPLIED, INCLUDING BUT NOT LIMITED TO ANY IMPLIED WARRANTY OR MECHANTABILITY OR FITNESS FOR A PARTICULAR PURPOSE. SINCE THE USE OF THE HEREIN DESCRIBED MATERIALS INVOLVES MANY VARIABLES IN METHODS OF APPLICATION, HANDLING AND/OR USE, THE USER IN ACCEPTING AND USING THESE MATERIALS ASSUMES ALL RESPONSIBILITY FOR THE END RESULT. THE PURCHASE OF THIS ITW POLYMERS SEALANTS NORTH AMERICA, INC. PRODUCT IS SUBJECT TO THE TERMS AND CONDITIONS AF AN "AS IS" SALE, AND IF THE PRODUCT IS PROVED TO BE DEFECTIVE, THE EXCLUSIVE REMEDY, AT ITW POLYMERS SEALANTS NORTH AMERICA, INC.'S OPTION, SHALL BE TO REPLACE THE DEFECTIVE ITW POLYMERS SEALANTS NORTH AMERICA, INC. PRODUCT. ITW POLYMERS SEALANTS NORTH AMERICA, INC. SHALL NOT OTHERWISE BE LIABLE FOR LOSS OF DAMAGES, WHETHER DIRECT, INDIRECT, SPECIAL, INCIDENTAL OR CONSEQUENTIAL, REGARDLESS OF THE LEGAL THEORY ASSERTED, INCLUDING NEGLIGENCE, WARRANTY OR STRICT LIABILITY.

Complete technical information is available from
ITW Polymers Sealants North America, Inc.

ITW POLYMERS SEALANTS NORTH AMERICA, INC.
12055 Cutten Rd. Houston TX 77066
Tel: 972-438-9111 Fax: 972-554-3939 www.itwsealants.com

Conforms to HazCom 2012/ United States

Safety Data Sheet

Section 1. Identification

GHS product Identifier **650 Sheet Membrane**
Other means of identification Not available

Relevant identified used of the substance or mixtures and uses advised against
Polymer modified bitumen membrane used as a post concrete self-adhesive water proofing membrane/vapor retarder that virtually eliminates water and vapor transmission through concrete slabs.

Supplier's details Polyguard Products, Inc.
4101 South Interstate 45
Ennis, TX 75119
Tel: (214) 515-5000
Emergency telephone number) with hours of operation) CHEMTREC, US 1-800-424-9300 International 1-703-527-3887 (24/7)

Section 2. Hazards Identification

OSHA/HCS status While this material is not considered hazardous by the OSHA Hazardous Communications Standard (49CFR1910.1200) , this SDS contains valuable information critical to the safe handling and proper use of the product. This SDS should be retained and available for employees and other users of this product.
Classification of the substance or mixture Not classified

This product is manufactured as an article under the United States Hazard Communication System and is exempted from the regulatory requirements under HCS.

GHS label elements
Signal word No signal word
Hazard statement No known significant effects or critical hazards.
Precautionary statements
Prevention Not applicable
Response Not applicable
Storage Not applicable
Disposal Not applicable
Hazards not otherwise classified None known

Section 3. Composition/Information on Ingredients

Substance/Mixture Mixture
Other means of identification Not available

Ingredient name	%	CAS #
Asphalts	**60-80**	**8052-42-4**
Distillates(petroleum), petroleum residues vaccum	**60-80**	**68955-27-1**
Hydrogen Sulfide	**0.001-0.01**	**7783-06-4**
Limestone	**15 - 20**	**1317-65-3**
Crystalline Silica, quartz (inpurity)	**0.5 – 1.5**	**14808-60-7**

The exact percentage (concentration) in the composition has been withheld as a trade secret.
Occupational exposure limits, if available are listed in section 8.
None of the components of this article are in a respirable state.

Section 4. First Aid Measures

Description of necessary first aid measures.

Eye contact	Immediately flush eyes with plenty of water, occasionally lifting the upper and lower eyelids. Check for and remove any contact lenses. Get medical attention if symptoms occur.
Inhalation	Because of the nature of this product, inhalation is not a route of exposure.
Skin contact	Material is in a solid form. If skin contact, wash area with soap and water. Get medical attention if skin irritation occurs.
Ingestion	Ingestion is not a route of exposure.

Most important symptoms/effects, acute and delayed

Potential acute health effects

Eye contact	No known significant effects or critical hazards
Inhalation	No known significant effects or critical hazards
Skin contact	No known significant effects or critical hazards
Ingestion	No known significant effects or critical hazards

Over-exposure signs/symptoms

Eye contact	No known significant effects or critical hazards
Inhalation	No known significant effects or critical hazards
Skin contact	No known significant effects or critical hazards
Ingestion	No known significant effects or critical hazards

Indication of immediate medical attention and special treatment needed, if necessary.

Notes to physician:	Treat symptomatically.
Specific treatments	No specific treatment
Protection of first aiders	No action shall be taken involving any personal risk or without suitable training.

Section 5. Fire-Fighting Measures

Extinguishing media

Suitable extinguishing media	Use an extinguishing agent suitable for the surrounding fire.
Unsuitable extinguishing media	None known
Specific hazards arising from the chemical	No specific fire or explosion hazard.
Hazardous thermal decomposition products	Decomposition products may include the following materials: Carbon Dioxide Carbon Monoxide Sulfur oxides Low MW hydrocarbons
Special protective equipment	Fire-fighters should wear appropriate protective equipment and self-contained breathing apparatus (SCBA) with a full-face piece operated in a positive pressure mode.
Special protective actions for fire fighters	Promptly isolate the scene by removing all persons from the vicinity of the incident is there is a fire. No action shall be taken involving any personal risks or without suitable training.

Section 6. Accidental Release Measures

Personal precautions, protective equipment and emergency procedures.

For non emergency personal Put on appropriate personal protective equipment.

For emergency responders If specialized clothing is required to deal with the spillage, take note of any information in Section 8 on suitable and unsuitable materials. See also the information in "For non-emergency personnel."

Enviromental precautions Material will not spill.

Methods and materials for containment and cleaning up

Spill Due to the physical state of this material, spills are not possible.

Section 7. Handling and Storage

Precautions for safe handling

Protective measures Put on appropriate personal protective equipment (see Section 8).

Advice on general occupational hygiene Eating, drinking and smoking should be prohibited in areas where material is handled, stored and processed. Workers should wash hands and face before eating, drinking and smoking. See section 8 for additional information on hygiene measures.

Conditions for safe storage, including any incompatibilities Store in accordance with local regulations. Store in original container protected from direct sunlight in a dry cool and well-ventilated area away from incompatible materials (see section 10) and food and drink. Keep container tightly closed and sealed until ready to use. Do not store in unlabeled containers.

Section 8. Exposure Controls/Personal Protection

Occupational exposure limits

Ingredient name	Exposure limits
Asphalt	**NIOSH REL (United States, 10/2016)** CEIL: 5 mg/m^3 15 minutes. Form: fume **ACGIH TLV (United States, 3/2019)** TWA: 0.5 mg/m^3 , (as benzene soluble aerosol) 8 hours. Form: inhalable fraction.
Distillates(petroleum), petroleum residues vaccum	None
Hydrogen Sulfide	**ACGIH TLV (United States, 3/2018)** TWA: 1 ppm 8 hours STEL: 5 ppm 15 minutes **OSHA PEL Z2 (United States, 2/2013)** CEIL:20 ppm AMP: 50 ppm 10 minutes. **NIOSH REL (United States, 10/2016)** CEIL: 15 mg/m^3 10 minutes.
Limestone	**NIOSH REL (United States, 10/2016)** TWA: 10 mg/m^3 (total) TWA 5 mg/m^3 (respirable) **OSHA PEL (United States, 2/2013)** TWA: 15 mg/m^3 (total) TWA 5 mg/m3 (respirable)
Crystalline Silica, quartz (inpurity)	**NIOSH REL (United States, 10/2016)** Ca TWA: 0.05 mg/m^3

Section 8. Exposure Controls/Personal Protection

Appropriate engineering controls	No special ventilation requirements. Good ventilation should be sufficient to control worker exposure to airborne contaminants.
Environmental exposure controls	Emissions from ventilation or work process equipment should be checked to ensure they comply with the requirements of environmental protection legislation.
Hygiene measure	Wash hands, forearms and face thoroughly after handling chemical products, before eating, smoking, and using the lavatory and at the end of the working period. Ensure that eyewash stations and safety showers are close to the workstation location.
Eye/face protection	Safety eyewear complying with an approved standard should be used when risk assessment indicates this is necessary to avoid exposure to liquid splashes, mists, gases and dusts.
Skin Protection	
Hand protection	Chemical- resistant, impervious gloves complying with an approved standard should be worn at all times when handling chemical products if a risk assessment indicates this is necessary.
Body protection	Personal protective equipment for the body should be selected based on the task being preformed and the risks involved and should be approved by a specialist before handling this product.
Other skin protection	Appropriate footwear and any additional skin protection measures should be selected based on the task being preformed and the risks involved and should be approved by a specialist before handling this product.
Respiratory protection	Based on the hazard and potential for exposure, select a respirator that meets the appropriate standard or certification. Respirators must be used according to a respiratory protection program to ensure proper fitting, training, and other important aspects of use.

Section 9. Physical and Chemical Properties

Appearance	
Physical state	Solid
Color	Black/white backing
Odor	Asphaltic(slight)
Odor threshold	Not available
pH	Not applicable
Melting point	Not available
Boiling point	Not applicable
Flash Point	Not determined
Evaporation rate:	Not applicable
Flammability (solid, gas)	Not applicable
Lower & upper explosive (flammable) limits	Not applicable
Vapor density	Not applicable
Vapor pressure	Not applicable
Relative density	1.09
Solubility	Insoluble in water
Partition coefficient: n- octanol/water	Not available
Auto- ignition temperature	Not applicable
Decomposition temperature	Not applicable
Viscosity	Not applicable
VOC	0 g/l

Section 10. Stability and Reactivity

Reactivity No specific test data related to reactivity available for this product or its ingredients.

Chemical stability This product is stable.

Possibility of hazardous reactions Under normal conditions of storage and use, hazardous reaction will not occur.

Conditions to avoid: No specific data.

Incompatible materials Reactive or incompatible with the following materials: Oxidizing materials

Hazardous decomposition products Under normal conditions of storage and use, hazardous decomposition products should not be produced.

Section 11. Toxicological Information

Information on toxicological effects

Acute toxicity

Product/ingredient name	Result	Species	Dose	Exposure
Asphalt	LD50 Oral	Rat	>5000 mg/kg	-
Hydrogen Sulfide	LC50 Inhalation Gas	Rat	444 ppm	4 hours
	LC50 Inhalation Vapor	Rat	700 mg/m^3	4 hours
Limestone	LD50 Oral	Rat	6450 mg/kg	-
Crystalline Silica, quartz (inpurity)	LD50 Oral	Rat Mouse	500 mg/kg	-

Irritation/Corrosion There is no data available

Sensitization There is no data available

Mutagenicity There is no data available

Carcinogenicity

Classification

Product/ingredient name	OSHA	IARC	NTP
Asphalt	-	2B	-
Crystalline Silica, quartz (inpurity)	-	1	-

Reproductive toxicity There is no data available

Teratogenicity There is no data available

Specific target organ toxicity (single exposure) There is no data available

Specific target organ toxicity (repeated exposure) There is no data available

Aspiration hazard There is no data available

Information on the likely routes of exposure Routes of entry anticipated: dermal contact
Routes of entry not anticipated: Oral, inhalation, ingestion

Potential acute health effects

Eye contact No known significant effects or critical hazards

Inhalation No known significant effects or critical hazards

Skin contact No known significant effects or critical hazards

Ingestion No known significant effects or critical hazards

Symptoms related to the physical, chemical and toxicological characteristics

Eye contact No known significant effects or critical hazards

Inhalation No known significant effects or critical hazards

Skin contact No known significant effects or critical hazards

Ingestion No known significant effects or critical hazards

Section 11. Toxicological Information

Delayed and immediate effects and chronic effects from short- and long-term exposure

Short term exposure

Potential immediate effects	No known significant effects or critical hazards
Potential delayed effects	No known significant effects or critical hazards

Long term exposure

Potential immediate effects	No known significant effects or critical hazards
Potential delayed effects	No known significant effects or critical hazards

Potential chronic health effects

General	No known significant effects or critical hazards
Carcinogenicity	No known significant effects or critical hazards
Mutagenicity	No known significant effects or critical hazards
Teratogenicity	No known significant effects or critical hazards
Developmental effects	No known significant effects or critical hazards
Fertility effects	No known significant effects or critical hazards

Numerical measures of toxicity

Acute toxicity estimates There is no data available

Section 12. Ecological Information

Toxicity

Product/ingredient name	Result	Species	Exposure
Hydrogen Sulfide	Acute EC50 62 µg/L Fresh water Acute LC50 2 µg/L Fresh water	Crustaceans-Gammarus pseudolimnaeus Fish- Coregonus clupeaformis- Yolk Sac fry	2 days 96 hours

Persistence and degradability There is no data available

Bioaccumulative potential There is no data available

Mobility in soil

Soil/water partition coefficient (K_{OC}) There is no data available.

Other adverse effects No known significant effects or critical hazards

Section 13. Disposal Considerations

Disposal methods The generation of waste should be avoided or minimized wherever possible. Disposal of this product, solutions and any by-products should comply with the requirements of environmental protection and waste disposal legislation and any regional local authority requirements. Empty containers or liners may retain some product residues. This material and its container must be disposed of in a safe way. Dispose of surplus and non-recyclable products via a licensed waste disposal contractor.

Section 14. Transportation Information

AERG: Not applicable

Regulatory Information:

DOT/TDG/IMDG/IATA Not regulated

Section 15. Regulatory Information

U.S. Federal regulations:	**TSCA 8(a) CDR Exempt/Partial exemption:** Not determined **United States inventory (TSCA 8 b):** all components are listed or exempted
Clean Air Act Section 112 (b) Hazardous air pollutants (HAPs)	Not listed
Clean Air Act (CAA) Section 602 Class I Substances	Not listed
Clean Air Act (CAA) Section 602 Class II Substances	Not listed
DEA List I Chemicals (Precursor chemicals)	Not listed
DEA List II Chemicals (Essential Chemicals)	Not listed
SARA 302/304	
Composition/information on ingredients	
SARA 304 RQ	Not applicable
SARA 311/312	Not applicable
SARA 313	Not applicable
State regulations	
Massachusetts	The following components are listed: Petroleum asphalt
New Jersey	The following components are listed: Petroleum asphalt
New York	None of the components are listed
Pennsylvania	The following components are listed: Petroleum asphalt
California Prop.65	None of the components are listed on the Prob 65 list dated 1-3-2020.

16. Other Information

Date of revision	**3-20-2020**
Date of previous issue	**12-17-2014**
Revisions	**Change Mfg. Address to 4101 S. I-45.** **Change phone number to 214-515-5000 from 800 number.** **Update product composition information**
Version	**5**
Prepared by	**C. Rogalski**

Notice to reader: To the best of our knowledge, the information contained herein is accurate. However, neither the above-named supplier nor any of its subsidiaries assumes any liability whatsoever for the accuracy or completeness of the information contained herein. Final determination of suitability of any material is the sole responsibility of the user. All materials may present unknown hazards and should be used with caution. Although certain hazards are described herein, we cannot guarantee that these are the only hazards that exist.

1. Identification

Product name	:	Sikadur® CrackFix Part A
Supplier	:	Sika Corporation 201 Polito Avenue Lyndhurst, NJ 07071 USA www.sikausa.com
Telephone	:	(201) 933-8800
Telefax	:	(201) 804-1076
E-mail address	:	ehs@sika-corp.com
Emergency telephone	:	CHEMTREC: 800-424-9300 INTERNATIONAL: 703-527-3887
Recommended use of the chemical and restrictions on use	:	For further information, refer to product data sheet.

2. Hazards identification

GHS Classification

Skin irritation, Category 2	H315: Causes skin irritation.
Serious eye damage, Category 1	H318: Causes serious eye damage.
Skin sensitization, Category 1	H317: May cause an allergic skin reaction.
Reproductive toxicity, Category 2	H361: Suspected of damaging fertility or the unborn child.

GHS label elements

Hazard pictograms :

Signal Word : Danger

Hazard Statements : H315 Causes skin irritation.
H317 May cause an allergic skin reaction.
H318 Causes serious eye damage.
H361 Suspected of damaging fertility or the unborn child.

Precautionary Statements : **Prevention:**
P201 Obtain special instructions before use.
P202 Do not handle until all safety precautions have been read and understood.
P261 Avoid breathing dust/ fume/ gas/ mist/ vapors/ spray.
P264 Wash skin thoroughly after handling.

P272 Contaminated work clothing must not be allowed out of the workplace.
P280 Wear protective gloves/ eye protection/ face protection.
P281 Use personal protective equipment as required.
Response:
P302 + P352 IF ON SKIN: Wash with plenty of soap and water.
P305 + P351 + P338 IF IN EYES: Rinse cautiously with water for several minutes. Remove contact lenses, if present and easy to do. Continue rinsing.
P308 + P313 IF exposed or concerned: Get medical advice/ attention.
P310 Immediately call a POISON CENTER/doctor.
P333 + P313 If skin irritation or rash occurs: Get medical advice/ attention.
P362 Take off contaminated clothing and wash before reuse.
Storage:
P405 Store locked up.
Disposal:
P501 Dispose of contents/ container to an approved waste disposal plant.

Warning : Reports have associated repeated and prolonged exposure to some of the chemicals in this product with permanent brain,liver, kidney and nervous system damage. Intentional misuse by deliberate concentration and inhalation of vapors may be harmful or fatal.

See Section 11 for more detailed information on health effects and symptoms.
There are no hazards not otherwise classified that have been identified during the classification process.
There are no ingredients with unknown acute toxicity used in a mixture at a concentration >= 1%.

3. Composition/information on ingredients

Hazardous ingredients

Chemical name	CAS-No.	Concentration (%)
bisphenol-A-(epichlorhydrin) epoxy resin	25068-38-6	>= 50 - < 100 %
1,3-bis(2,3-epoxypropoxy)-2,2-dimethylpropane	17557-23-2	>= 10 - < 20 %
[[(2-ethylhexyl)oxy]methyl]oxirane (2-ethylhexyl glycidyl ether)	2461-15-6	>= 2 - < 5 %
Phenol, 4-nonyl, branched	84852-15-3	>= 3 - < 5 %
solvent naphtha (petroleum), heavy arom.	64742-94-5	>= 2 - < 5 %

There are no additional ingredients present which, within the current knowledge of the supplier and in the concentrations applicable, are classified as hazardous to health or the environment and hence require reporting in this section.

4. First aid measures

If inhaled : Move to fresh air.
Consult a physician after significant exposure.

In case of skin contact	:	Take off contaminated clothing and shoes immediately. Wash off with soap and plenty of water. If symptoms persist, call a physician.
In case of eye contact	:	Small amounts splashed into eyes can cause irreversible tissue damage and blindness. In the case of contact with eyes, rinse immediately with plenty of water and seek medical advice. Continue rinsing eyes during transport to hospital. Remove contact lenses. Keep eye wide open while rinsing.
If swallowed	:	Clean mouth with water and drink afterwards plenty of water. Do not induce vomiting without medical advice. Do not give milk or alcoholic beverages. Never give anything by mouth to an unconscious person. Obtain medical attention.
Most important symptoms and effects, both acute and delayed	:	irritant effects sensitizing effects Allergic reactions Excessive lachrymation Erythema Dermatitis See Section 11 for more detailed information on health effects and symptoms. Causes skin irritation. May cause an allergic skin reaction. Causes serious eye damage. Suspected of damaging fertility or the unborn child.
Protection of first-aiders	:	Move out of dangerous area. Consult a physician. Show this material safety data sheet to the doctor in attendance.
Notes to physician	:	Treat symptomatically.

5. Fire-fighting measures

Suitable extinguishing media	:	Use extinguishing measures that are appropriate to local circumstances and the surrounding environment.
Specific extinguishing methods	:	Collect contaminated fire extinguishing water separately. This must not be discharged into drains. Fire residues and contaminated fire extinguishing water must be disposed of in accordance with local regulations.
Special protective equipment for fire-fighters	:	In the event of fire, wear self-contained breathing apparatus.

6. Accidental release measures

Personal precautions, protective equipment and emergency procedures	:	Use personal protective equipment. Deny access to unprotected persons.
Environmental precautions	:	Do not flush into surface water or sanitary sewer system. If the product contaminates rivers and lakes or drains inform respective authorities. Local authorities should be advised if significant spillages cannot be contained.
Methods and materials for containment and cleaning up	:	Soak up with inert absorbent material (e.g. sand, silica gel, acid binder, universal binder, sawdust). Keep in suitable, closed containers for disposal.

7. Handling and storage

Advice on safe handling	:	Do not breathe vapors or spray mist. Avoid exceeding the given occupational exposure limits (see section 8). Do not get in eyes, on skin, or on clothing. For personal protection see section 8. Persons with a history of skin sensitization problems or asthma, allergies, chronic or recurrent respiratory disease should not be employed in any process in which this mixture is being used. Smoking, eating and drinking should be prohibited in the application area. Follow standard hygiene measures when handling chemical products.
Conditions for safe storage	:	Store in original container. Keep container tightly closed in a dry and well-ventilated place. Containers which are opened must be carefully resealed and kept upright to prevent leakage. Observe label precautions. Store in accordance with local regulations.
Materials to avoid	:	No data available

8. Exposure controls/personal protection

Contains no substances with occupational exposure limit values.

Engineering measures	:	Use of adequate ventilation should be sufficient to control worker exposure to airborne contaminants. If the use of this product generates dust, fumes, gas, vapor or mist, use process enclosures, local exhaust ventilation or other engineering controls to keep worker exposure below any recommended or statutory limits.

Personal protective equipment

Respiratory protection	:	Use a properly fitted NIOSH approved air-purifying or air-fed respirator complying with an approved standard if a risk assessment indicates this is necessary. The filter class for the respirator must be suitable for the maximum expected contaminant concentration (gas/vapor/aerosol/particulates) that may arise when handling the product. If this concentration is exceeded, self-contained breathing apparatus must be used.
Hand protection Remarks	:	Chemical-resistant, impervious gloves complying with an approved standard should be worn at all times when handling chemical products if a risk assessment indicates this is necessary.
Eye protection	:	Safety eyewear complying with an approved standard should be used when a risk assessment indicates this is necessary.
Skin and body protection	:	Choose body protection in relation to its type, to the concentration and amount of dangerous substances, and to the specific work-place.
Hygiene measures	:	Avoid contact with skin, eyes and clothing. Wash hands before breaks and immediately after handling the product. Remove contaminated clothing and protective equipment before entering eating areas. Wash thoroughly after handling.

9. Physical and chemical properties

Appearance	:	liquid
Color	:	clear straw-like
Odor	:	aromatic
Odor Threshold	:	No data available
Flash point	:	ca. > 212 °F (> 100 °C)
Ignition temperature	:	No data available
Decomposition temperature	:	No data available
Lower explosion limit (Vol%)	:	No data available
Upper explosion limit (Vol%)	:	No data available
Flammability (solid, gas)	:	No data available
Oxidizing properties	:	No data available

pH	:	No data available
Melting point/range / Freezing point	:	No data available
Boiling point/boiling range	:	No data available
Vapor pressure	:	0.001 mmHg (0.001 hpa)
Density	:	1.12 g/cm3 at 68 °F (20 °C)
Water solubility	:	Note: insoluble
Partition coefficient: n-octanol/water	:	No data available
Viscosity, dynamic	:	No data available
Viscosity, kinematic	:	ca.> 20.5 mm2/s at 104 °F (40 °C)
Relative vapor density	:	No data available
Evaporation rate	:	No data available
Burning rate	:	No data available
Volatile organic compounds (VOC) content	:	22 g/l A+B Combined

10. Stability and reactivity

Reactivity	:	No dangerous reaction known under conditions of normal use.
Chemical stability	:	The product is chemically stable.
Possibility of hazardous reactions	:	Stable under recommended storage conditions.
Conditions to avoid	:	No data available
Incompatible materials	:	No data available

11. Toxicological information

Acute toxicity

Not classified based on available information.

Ingredients:

bisphenol-A-(epichlorhydrin) epoxy resin:

Acute oral toxicity	:	LD50 Oral (Rat): > 5,000 mg/kg

Acute dermal toxicity : LD50 Dermal (Rabbit): > 20,000 mg/kg

Phenol, 4-nonyl, branched:
Acute dermal toxicity : LD50 Dermal (Rabbit): 3,160 mg/kg

Skin corrosion/irritation

Causes skin irritation.

Serious eye damage/eye irritation

Causes serious eye damage.

Respiratory or skin sensitization

Skin sensitization: May cause an allergic skin reaction.
Respiratory sensitization: Not classified based on available information.

Germ cell mutagenicity

Not classified based on available information.

Reproductive toxicity

Suspected of damaging fertility or the unborn child.

STOT-single exposure

Not classified based on available information.

STOT-repeated exposure

Reports have associated repeated and prolonged exposure to some of the chemicals in this product with permanent brain,liver, kidney and nervous system damage. Intentional misuse by deliberate concentration and inhalation of vapors may be harmful or fatal.
Once sensitized, a severe allergic reaction may occur when subsequently exposed to very low levels.

Aspiration toxicity

Not classified based on available information.

Carcinogenicity

Not classified based on available information.

IARC	Not applicable
NTP	Not applicable

12. Ecological information

Other information

Do not empty into drains; dispose of this material and its container in a safe way.
Avoid dispersal of spilled material and runoff and contact with soil, waterways, drains and sewers.
Toxic to aquatic organisms, may cause long-term adverse effects in the aquatic environment.
May be harmful to the environment if released in large quantities.
Water polluting material.

Component:

bisphenol-A-	25068-38-6	Toxicity to fish:

(epichlorhydrin) epoxy resin	LC50 Species: Oncorhynchus mykiss (rainbow trout) Dose: 2 mg/l Exposure time: 96 h Toxicity to daphnia and other aquatic invertebrates: EC50 Species: Daphnia magna (Water flea) Dose: 1.8 mg/l Exposure time: 48 h

13. Disposal considerations

Disposal methods

Waste from residues	:	Disposal of this product, solutions and any by-products should at all times comply with the requirements of environmental protection and waste disposal legislation and any regional local authority requirements.
Contaminated packaging	:	Empty containers should be taken to an approved waste handling site for recycling or disposal.

14. Transport information

DOT
Not regulated

IATA

UN number	3082
Description of the goods	Environmentally hazardous substance, liquid, n.o.s. (bisphenol-A-(epichlorhydrin) epoxy resin)
Class	9
Packing group	III
Labels	9
Packing instruction (cargo aircraft)	964
Packing instruction (passenger aircraft)	964
Packing instruction (passenger aircraft)	Y964

IMDG

UN number	3082
Description of the goods	ENVIRONMENTALLY HAZARDOUS SUBSTANCE, LIQUID, N.O.S. (bisphenol-A-(epichlorhydrin) epoxy resin)
Class	9
Packing group	III
Labels	9
EmS Number 1	F-A
EmS Number 2	S-F

Marine pollutant yes

IMDG: For Limited Quantity special provisions reference IMDG Code Chapter 3.4

Special precautions for user
No data available

Transport in bulk according to Annex II of MARPOL 73/78 and the IBC Code
Not applicable

15. Regulatory information

TSCA list : All chemical substances in this product are either listed on the TSCA Inventory or are in compliance with a TSCA Inventory exemption.

EPCRA - Emergency Planning and Community Right-to-Know

CERCLA Reportable Quantity
This material does not contain any components with a CERCLA RQ.

SARA304 Reportable Quantity
This material does not contain any components with a section 304 EHS RQ.

SARA 311/312 Hazards : Acute Health Hazard
Chronic Health Hazard

SARA 302 : This material does not contain any components with a section 302 EHS TPQ.

SARA 313 : The following components are subject to reporting levels established by SARA Title III, Section 313:
Phenol, 4-nonyl, branched 84852-15-3 4.00 %

Clean Air Act

Ozone-Depletion Potential This product neither contains, nor was manufactured with a Class I or Class II ODS as defined by the U.S. Clean Air Act Section 602 (40 CFR 82, Subpt. A, App.A + B).

This product does not contain any hazardous air pollutants (HAP), as defined by the U.S. Clean Air Act Section 112 (40 CFR 61).
This product does not contain any chemicals listed under the U.S. Clean Air Act Section 112(r) for Accidental Release Prevention (40 CFR 68.130, Subpart F).

California Prop 65 ⚠**WARNING:** Cancer – www.P65Warnings.ca.gov

16. Other information

HMIS Classification

Health	*	3
Flammability		1
Physical Hazard		0
Personal Protection		X

Caution: HMIS® rating is based on a 0-4 rating scale, with 0 representing minimal hazards or risks, and 4 representing significant hazards or risks. Although HMIS® rating is not required on SDSs under 29 CFR 1910.1200, the preparer may choose to provide them. HMIS® rating is to be used with a fully implemented HMIS® program. HMIS® is a registered mark of the National Paint & Coatings Association (NPCA). Please note HMIS® attempts to convey full health warning information to all employees.

Notes to Reader

The information contained in this Safety Data Sheet applies only to the actual Sika Corporation ("Sika") product identified and described herein. This information is not intended to address, nor does it address the use or application of the identified Sika product in combination with any other material, product or process. All of the information set forth herein is based on technical data regarding the identified product that Sika believes to be reliable as of the date hereof. Prior to each use of any Sika product, the user must always read and follow the warnings and instructions on the product's current Product Data Sheet, product label and Safety Data Sheet for each Sika product, which are available at web site and/or telephone number listed in Section 1 of this SDS.

SIKA MAKES NO WARRANTIES EXPRESS OR IMPLIED AND ASSUMES NO LIABILITY ARISING FROM THIS INFORMATION OR ITS USE. SIKA SHALL NOT BE LIABLE UNDER ANY LEGAL THEORY FOR SPECIAL OR CONSEQUENTIAL DAMAGES AND SHALL NOT BE RESPONSIBLE FOR THE USE OF THIS PRODUCT IN A MANNER TO INFRINGE ON ANY PATENT OR ANY OTHER INTELLECTUAL PROPERTY RIGHTS HELD BY OTHERS.

All sales of Sika products are subject to its current terms and conditions of sale available at www.sikausa.com or 201-933-8800.

Revision Date 03/14/2017

Material number: 183765

1. Identification

Product name	:	Sikadur® CrackFix Part B
Supplier	:	Sika Corporation 201 Polito Avenue Lyndhurst, NJ 07071 USA www.sikausa.com
Telephone	:	(201) 933-8800
Telefax	:	(201) 804-1076
E-mail address	:	ehs@sika-corp.com
Emergency telephone	:	CHEMTREC: 800-424-9300 INTERNATIONAL: 703-527-3887
Recommended use of the chemical and restrictions on use	:	For further information, refer to product data sheet.

2. Hazards identification

GHS Classification

Acute toxicity, Category 4 (Oral)	H302: Harmful if swallowed.
Skin corrosion, Category 1B	H314: Causes severe skin burns and eye damage.
Serious eye damage, Category 1	H318: Causes serious eye damage.
Skin sensitization, Category 1	H317: May cause an allergic skin reaction.
Reproductive toxicity, Category 2	H361: Suspected of damaging fertility or the unborn child.

GHS label elements

Hazard pictograms :

Signal Word : Danger

Hazard Statements : H302 Harmful if swallowed.
H314 Causes severe skin burns and eye damage.
H317 May cause an allergic skin reaction.
H361 Suspected of damaging fertility or the unborn child.

Precautionary Statements : **Prevention:**
P201 Obtain special instructions before use.
P202 Do not handle until all safety precautions have been read and understood.
P260 Do not breathe dusts or mists.

P270 Do not eat, drink or smoke when using this product.
P272 Contaminated work clothing must not be allowed out of the workplace.
P280 Wear protective gloves/ protective clothing/ eye protection/ face protection.
P281 Use personal protective equipment as required.
Response:
P301 + P312 IF SWALLOWED: Call a POISON CENTER/doctor if you feel unwell.
P301 + P330 + P331 IF SWALLOWED: Rinse mouth. Do NOT induce vomiting.
P303 + P361 + P353 IF ON SKIN (or hair): Take off immediately all contaminated clothing. Rinse skin with water/shower.
P304 + P340 IF INHALED: Remove person to fresh air and keep comfortable for breathing.
P305 + P351 + P338 IF IN EYES: Rinse cautiously with water for several minutes. Remove contact lenses, if present and easy to do. Continue rinsing.
P308 + P313 IF exposed or concerned: Get medical advice/ attention.
P310 Immediately call a POISON CENTER/doctor.
P333 + P313 If skin irritation or rash occurs: Get medical advice/ attention.
P363 Wash contaminated clothing before reuse.
Storage:
P405 Store locked up.
Disposal:
P501 Dispose of contents/ container to an approved waste disposal plant.

Warning : Reports have associated repeated and prolonged exposure to some of the chemicals in this product with permanent brain,liver, kidney and nervous system damage. Intentional misuse by deliberate concentration and inhalation of vapors may be harmful or fatal.

See Section 11 for more detailed information on health effects and symptoms.
There are no hazards not otherwise classified that have been identified during the classification process.
There are no ingredients with unknown acute toxicity used in a mixture at a concentration >= 1%.

3. Composition/information on ingredients

Hazardous ingredients

Chemical name	CAS-No.	Concentration (%)
Benzyl alcohol	100-51-6	>= 20 - < 25 %
Aliphatic Amines	Proprietary	>= 20 - < 25 %
Isophoronediamine	2855-13-2	>= 10 - < 20 %
Phenol, 4-nonyl, branched	84852-15-3	>= 10 - < 20 %
2,4,6-tris(dimethylaminomethyl)phenol	90-72-2	>= 10 - < 20 %
solvent naphtha (petroleum), heavy arom.	64742-94-5	>= 5 - < 10 %
2-methylnaphthalene	91-57-6	>= 2 - < 5 %

bis[(dimethylamino)methyl]phenol	71074-89-0	>= 1 - < 2 %
P-toluenesulphonic acid (containing a maximum of 5 % H2SO4)	104-15-4	>= 1 - < 2 %

There are no additional ingredients present which, within the current knowledge of the supplier and in the concentrations applicable, are classified as hazardous to health or the environment and hence require reporting in this section.

4. First aid measures

If inhaled : Move to fresh air.
Consult a physician after significant exposure.

In case of skin contact : Take off contaminated clothing and shoes immediately.
Wash off with soap and plenty of water.
Immediate medical treatment is necessary as untreated wounds from corrosion of the skin heal slowly and with difficulty.

In case of eye contact : Small amounts splashed into eyes can cause irreversible tissue damage and blindness.
In the case of contact with eyes, rinse immediately with plenty of water and seek medical advice.
Continue rinsing eyes during transport to hospital.
Remove contact lenses.
Keep eye wide open while rinsing.

If swallowed : Clean mouth with water and drink afterwards plenty of water.
Do not induce vomiting without medical advice.
Do not give milk or alcoholic beverages.
Never give anything by mouth to an unconscious person.
Take victim immediately to hospital.

Most important symptoms and effects, both acute and delayed : Health injuries may be delayed.
corrosive effects
sensitizing effects

Gastrointestinal discomfort
Allergic reactions
Dermatitis
See Section 11 for more detailed information on health effects and symptoms.

Harmful if swallowed.
May cause an allergic skin reaction.
Causes serious eye damage.
Suspected of damaging fertility or the unborn child.
Causes severe burns.

Protection of first-aiders : Move out of dangerous area.
Consult a physician.
Show this material safety data sheet to the doctor in attendance.

Notes to physician : Treat symptomatically.

5. Fire-fighting measures

Suitable extinguishing media	:	Use extinguishing measures that are appropriate to local circumstances and the surrounding environment.
Specific extinguishing methods	:	Collect contaminated fire extinguishing water separately. This must not be discharged into drains. Fire residues and contaminated fire extinguishing water must be disposed of in accordance with local regulations.
Special protective equipment for fire-fighters	:	In the event of fire, wear self-contained breathing apparatus.

6. Accidental release measures

Personal precautions, protective equipment and emergency procedures	:	Use personal protective equipment. Deny access to unprotected persons.
Environmental precautions	:	Do not flush into surface water or sanitary sewer system. If the product contaminates rivers and lakes or drains inform respective authorities. Local authorities should be advised if significant spillages cannot be contained.
Methods and materials for containment and cleaning up	:	Soak up with inert absorbent material (e.g. sand, silica gel, acid binder, universal binder, sawdust). Keep in suitable, closed containers for disposal.

7. Handling and storage

Advice on safe handling	:	Avoid exceeding the given occupational exposure limits (see section 8). Do not get in eyes, on skin, or on clothing. For personal protection see section 8. Persons with a history of skin sensitization problems or asthma, allergies, chronic or recurrent respiratory disease should not be employed in any process in which this mixture is being used. Smoking, eating and drinking should be prohibited in the application area. Follow standard hygiene measures when handling chemical products.
Conditions for safe storage	:	Store in original container. Keep container tightly closed in a dry and well-ventilated place. Containers which are opened must be carefully resealed and kept upright to prevent leakage. Observe label precautions. Store in accordance with local regulations.
Materials to avoid	:	No data available

8. Exposure controls/personal protection

Component	CAS-No.	Basis **	Value	Exposure limit(s)* / Form of exposure
2-methylnaphthalene	91-57-6	ACGIH	TWA	0.5 ppm

*The above mentioned values are in accordance with the legislation in effect at the date of the release of this safety data sheet.

**Basis
ACGIH. Threshold Limit Values (TLV)
OSHA P0. Table Z-1, Limit for Air Contaminat (1989 Vacated Values)
OSHA P1. Permissible Exposure Limits (PEL), Table Z-1, Limit for Air Contaminant
OSHA P2. Permissible Exposure Limits (PEL), Table Z-2
OSHA Z3. Table Z-3, Mineral Dust

Engineering measures : Use of adequate ventilation should be sufficient to control worker exposure to airborne contaminants. If the use of this product generates dust, fumes, gas, vapor or mist, use process enclosures, local exhaust ventilation or other engineering controls to keep worker exposure below any recommended or statutory limits.

Personal protective equipment

Respiratory protection : Use a properly fitted NIOSH approved air-purifying or air-fed respirator complying with an approved standard if a risk assessment indicates this is necessary.

The filter class for the respirator must be suitable for the maximum expected contaminant concentration (gas/vapor/aerosol/particulates) that may arise when handling the product. If this concentration is exceeded, self-contained breathing apparatus must be used.

Hand protection
Remarks : Chemical-resistant, impervious gloves complying with an approved standard should be worn at all times when handling chemical products if a risk assessment indicates this is necessary.

Eye protection : Safety eyewear complying with an approved standard should be used when a risk assessment indicates this is necessary.

Skin and body protection : Choose body protection in relation to its type, to the concentration and amount of dangerous substances, and to the specific work-place.

Hygiene measures : Avoid contact with skin, eyes and clothing.
Wash hands before breaks and immediately after handling the product.

Remove contaminated clothing and protective equipment before entering eating areas.
Wash thoroughly after handling.

9. Physical and chemical properties

Appearance	:	liquid
Color	:	amber
Odor	:	amine-like
Odor Threshold	:	No data available
Flash point	:	ca. > 212 °F (> 100 °C)
Ignition temperature	:	No data available
Decomposition temperature	:	No data available
Lower explosion limit (Vol%)	:	No data available
Upper explosion limit (Vol%)	:	No data available
Flammability (solid, gas)	:	No data available
Oxidizing properties	:	No data available
pH	:	No data available
Melting point/range / Freezing point	:	No data available
Boiling point/boiling range	:	No data available
Vapor pressure	:	0.05 mmHg (0.07 hpa)
Density	:	ca.0.98 g/cm3 at 68 °F (20 °C)
Water solubility	:	Note: soluble
Partition coefficient: n-octanol/water	:	No data available
Viscosity, dynamic	:	No data available
Viscosity, kinematic	:	ca.> 20.5 mm2/s at 104 °F (40 °C)
Relative vapor density	:	No data available
Evaporation rate	:	No data available
Burning rate	:	No data available
Volatile organic compounds	:	22 g/l

(VOC) content	A+B Combined

10. Stability and reactivity

Reactivity	:	No dangerous reaction known under conditions of normal use.
Chemical stability	:	The product is chemically stable.
Possibility of hazardous reactions	:	Stable under recommended storage conditions.
Conditions to avoid	:	No data available
Incompatible materials	:	No data available

11. Toxicological information

Acute toxicity

Harmful if swallowed.

Ingredients:

Benzyl alcohol:

Acute oral toxicity	:	LD50 Oral (Rat): 1,620 mg/kg
Acute inhalation toxicity	:	LC50 (Rat): > 4.178 mg/l Exposure time: 4 h Test atmosphere: dust/mist

Isophoronediamine:

Acute oral toxicity	:	LD50 Oral (Rat): 1,030 mg/kg
Acute dermal toxicity	:	LD50 Dermal (Rabbit): > 2,000 mg/kg

Phenol, 4-nonyl, branched:

Acute dermal toxicity	:	LD50 Dermal (Rabbit): 3,160 mg/kg

Skin corrosion/irritation

Causes severe burns.

Serious eye damage/eye irritation

Causes serious eye damage.

Respiratory or skin sensitization

Skin sensitization: May cause an allergic skin reaction.
Respiratory sensitization: Not classified based on available information.

Ingredients:

Isophoronediamine:
Assessment: The product is a skin sensitizer, sub-category 1A.
Result: The product is a skin sensitizer, sub-category 1A.

Germ cell mutagenicity

Not classified based on available information.

Reproductive toxicity

Suspected of damaging fertility or the unborn child.

STOT-single exposure

Not classified based on available information.

STOT-repeated exposure

Once sensitized, a severe allergic reaction may occur when subsequently exposed to very low levels.
Reports have associated repeated and prolonged exposure to some of the chemicals in this product with permanent brain,liver, kidney and nervous system damage. Intentional misuse by deliberate concentration and inhalation of vapors may be harmful or fatal.

Aspiration toxicity

Not classified based on available information.

Carcinogenicity

Not classified based on available information.

IARC	Not applicable
NTP	Not applicable

12. Ecological information

Other information	Do not empty into drains; dispose of this material and its container in a safe way. Avoid dispersal of spilled material and runoff and contact with soil, waterways, drains and sewers. Toxic to aquatic organisms, may cause long-term adverse effects in the aquatic environment. May be harmful to the environment if released in large quantities. Water polluting material.

Component:

Benzyl alcohol	100-51-6	Toxicity to fish: LC50 Species: Fish Dose: > 100 mg/l Exposure time: 96 h Toxicity to daphnia and other aquatic invertebrates: EC50 Species: Daphnia magna (Water flea) Dose: > 100 mg/l Exposure time: 48 h
Isophoronediamine	2855-13-2	Toxicity to algae: ErC50 Species: Desmodesmus subspicatus (green algae) Dose: > 10 - 100 mg/l Exposure time: 72 h

2,4,6-tris(dimethylaminomethyl)phenol	90-72-2	Toxicity to algae: EC50 Species: Scenedesmus capricornutum (fresh water algae) Dose: > 10 - 100 mg/l Exposure time: 72 h

13. Disposal considerations

Disposal methods

Waste from residues	:	Disposal of this product, solutions and any by-products should at all times comply with the requirements of environmental protection and waste disposal legislation and any regional local authority requirements.
Contaminated packaging	:	Empty containers should be taken to an approved waste handling site for recycling or disposal.

14. Transport information

DOT

UN number	3267
Description of the goods	Corrosive liquid, basic, organic, n.o.s. (Isophoronediamine, Phenol, 4-nonyl, branched)
Class	8
Packing group	II
Labels	8
Emergency Response Guidebook Number	153

IATA

UN number	3267
Description of the goods	Corrosive liquid, basic, organic, n.o.s. (Isophoronediamine, Phenol, 4-nonyl, branched)
Class	8
Packing group	II
Labels	8
Packing instruction (cargo aircraft)	855
Packing instruction (passenger aircraft)	851
Packing instruction (passenger aircraft)	Y840

IMDG

UN number	3267
Description of the goods	CORROSIVE LIQUID, BASIC, ORGANIC, N.O.S. (Isophoronediamine, Phenol, 4-nonyl, branched)
Class	8

Packing group	II
Labels	8
EmS Number 1	F-A
EmS Number 2	S-B
Marine pollutant	yes

DOT: For Limited Quantity exceptions reference 49 CFR 173.154 (b)
IMDG: For Limited Quantity special provisions reference IMDG Code Chapter 3.4

Special precautions for user
No data available

Transport in bulk according to Annex II of MARPOL 73/78 and the IBC Code
Not applicable

15. Regulatory information

TSCA list : All chemical substances in this product are either listed on the TSCA Inventory or are in compliance with a TSCA Inventory exemption.

EPCRA - Emergency Planning and Community Right-to-Know

CERCLA Reportable Quantity
This material does not contain any components with a CERCLA RQ.

SARA304 Reportable Quantity
This material does not contain any components with a section 304 EHS RQ.

SARA 311/312 Hazards : Acute Health Hazard
Chronic Health Hazard

SARA 302 : This material does not contain any components with a section 302 EHS TPQ.

SARA 313 : The following components are subject to reporting levels established by SARA Title III, Section 313:

Phenol, 4-nonyl, branched	84852-15-3	13.00 %

Clean Air Act

Ozone-Depletion Potential This product neither contains, nor was manufactured with a Class I or Class II ODS as defined by the U.S. Clean Air Act Section 602 (40 CFR 82, Subpt. A, App.A + B).

This product does not contain any hazardous air pollutants (HAP), as defined by the U.S. Clean Air Act Section 112 (40 CFR 61).
This product does not contain any chemicals listed under the U.S. Clean Air Act Section 112(r) for Accidental Release Prevention (40 CFR 68.130, Subpart F).

California Prop 65 ⚠**WARNING:** Cancer – www.P65Warnings.ca.gov

16. Other information

HMIS Classification

Health	*	3
Flammability		1
Physical Hazard		0
Personal Protection		X

Caution: HMIS® rating is based on a 0-4 rating scale, with 0 representing minimal hazards or risks, and 4 representing significant hazards or risks. Although HMIS® rating is not required on SDSs under 29 CFR 1910.1200, the preparer may choose to provide them. HMIS® rating is to be used with a fully implemented HMIS® program. HMIS® is a registered mark of the National Paint & Coatings Association (NPCA). Please note HMIS® attempts to convey full health warning information to all employees.

Notes to Reader

The information contained in this Safety Data Sheet applies only to the actual Sika Corporation ("Sika") product identified and described herein. This information is not intended to address, nor does it address the use or application of the identified Sika product in combination with any other material, product or process. All of the information set forth herein is based on technical data regarding the identified product that Sika believes to be reliable as of the date hereof. Prior to each use of any Sika product, the user must always read and follow the warnings and instructions on the product's current Product Data Sheet, product label and Safety Data Sheet for each Sika product, which are available at web site and/or telephone number listed in Section 1 of this SDS.

SIKA MAKES NO WARRANTIES EXPRESS OR IMPLIED AND ASSUMES NO LIABILITY ARISING FROM THIS INFORMATION OR ITS USE. SIKA SHALL NOT BE LIABLE UNDER ANY LEGAL THEORY FOR SPECIAL OR CONSEQUENTIAL DAMAGES AND SHALL NOT BE RESPONSIBLE FOR THE USE OF THIS PRODUCT IN A MANNER TO INFRINGE ON ANY PATENT OR ANY OTHER INTELLECTUAL PROPERTY RIGHTS HELD BY OTHERS.

All sales of Sika products are subject to its current terms and conditions of sale available at www.sikausa.com or 201-933-8800.

Revision Date 03/15/2017

Material number: 183766

SECTION 1. IDENTIFICATION

Product name	:	Sikaflex®-1A
Company name	:	Sika Corporation 201 Polito Avenue Lyndhurst, NJ 07071 USA www.sikausa.com
Telephone	:	(201) 933-8800
Telefax	:	(201) 804-1076
E-mail address	:	ehs@sika-corp.com
Emergency telephone	:	CHEMTREC: 800-424-9300 INTERNATIONAL: 703-527-3887
Recommended use of the chemical and restrictions on use	:	For further information, refer to product data sheet.

SECTION 2. HAZARDS IDENTIFICATION

GHS classification in accordance with 29 CFR 1910.1200

Respiratory sensitization	:	Category 1
Skin sensitization	:	Category 1
Carcinogenicity (Inhalation)	:	Category 1A
Specific target organ toxicity - repeated exposure (Inhalation)	:	Category 2

GHS label elements

Hazard pictograms :

Signal Word	:	Danger
Hazard Statements	:	H317 May cause an allergic skin reaction. H334 May cause allergy or asthma symptoms or breathing difficulties if inhaled. H350 May cause cancer by inhalation. H373 May cause damage to organs through prolonged or repeated exposure if inhaled.

Precautionary Statements :

Prevention:

P201 Obtain special instructions before use.
P202 Do not handle until all safety precautions have been read and understood.
P260 Do not breathe dust/ fume/ gas/ mist/ vapors/ spray.
P272 Contaminated work clothing must not be allowed out of the workplace.
P280 Wear protective gloves/ protective clothing/ eye protection/ face protection.
P284 Wear respiratory protection.

Response:

P302 + P352 IF ON SKIN: Wash with plenty of soap and water.
P304 + P340 IF INHALED: Remove person to fresh air and keep comfortable for breathing.
P308 + P313 IF exposed or concerned: Get medical advice/ attention.
P333 + P313 If skin irritation or rash occurs: Get medical advice/ attention.
P362 + P364 Take off contaminated clothing and wash it before reuse.

Storage:

P405 Store locked up.

Disposal:

P501 Dispose of contents/ container to an approved waste disposal plant.

Additional Labeling

There are no ingredients with unknown acute toxicity used in a mixture at a concentration >= 1%.

Other hazards

Intentional misuse by deliberate concentration and inhalation of vapor may be harmful or fatal.

SECTION 3. COMPOSITION/INFORMATION ON INGREDIENTS

Mixtures

Components

Chemical name	CAS-No.	Classification	Concentration (% w/w)
xylene	1330-20-7	Flam. Liq. 3; H226 Acute Tox. 4; H332 Acute Tox. 4; H312 Skin Irrit. 2; H315 Eye Irrit. 2A; H319 STOT SE 3; H335 STOT RE 2; H373 Asp. Tox. 1; H304	>= 1 - < 5
Quartz (SiO2)	14808-60-7	Carc. 1A; H350i STOT RE 1; H372	>= 0.1 - < 1

		STOT SE 3; H335	
ethylbenzene	100-41-4	Flam. Liq. 2; H225 Acute Tox. 4; H332 Carc. 2; H351 STOT RE 2; H373 Asp. Tox. 1; H304 Eye Irrit. 2A; H319	>= 0.1 - < 1
Toluene diisocyanate, oligomeric reaction products with 2,2'-oxydiethanol and propylidenetri-methanol	53317-61-6	Eye Irrit. 2A; H319 Skin Sens. 1; H317	>= 0.1 - < 1
4,4'-methylenediphenyl diisocyanate	101-68-8	Acute Tox. 4; H332 Skin Irrit. 2; H315 Eye Irrit. 2B; H320 Resp. Sens. 1; H334 Skin Sens. 1; H317 STOT SE 3; H335 STOT RE 2; H373	>= 0.1 - < 1

Actual concentration is withheld as a trade secret

SECTION 4. FIRST AID MEASURES

General advice : Move out of dangerous area.
Consult a physician.
Show this material safety data sheet to the doctor in attendance.

If inhaled : Move to fresh air.
Consult a physician after significant exposure.

In case of skin contact : Take off contaminated clothing and shoes immediately.
Wash off with soap and plenty of water.
If symptoms persist, call a physician.

In case of eye contact : Remove contact lenses.
Keep eye wide open while rinsing.
If eye irritation persists, consult a specialist.

If swallowed : Clean mouth with water and drink afterwards plenty of water.
Do not induce vomiting without medical advice.
Do not give milk or alcoholic beverages.
Never give anything by mouth to an unconscious person.
Obtain medical attention.

Most important symptoms and effects, both acute and delayed : Asthmatic appearance
Allergic reactions
sensitizing effects
May cause an allergic skin reaction.
May cause allergy or asthma symptoms or breathing difficulties if inhaled.
May cause cancer by inhalation.
May cause damage to organs through prolonged or repeated exposure if inhaled.

Notes to physician : Treat symptomatically.

SECTION 5. FIRE-FIGHTING MEASURES

Suitable extinguishing media	:	Use extinguishing measures that are appropriate to local circumstances and the surrounding environment.
Further information	:	Collect contaminated fire extinguishing water separately. This must not be discharged into drains. Fire residues and contaminated fire extinguishing water must be disposed of in accordance with local regulations.
Special protective equipment for fire-fighters	:	In the event of fire, wear self-contained breathing apparatus.

SECTION 6. ACCIDENTAL RELEASE MEASURES

Personal precautions, protective equipment and emergency procedures	:	Use personal protective equipment. Deny access to unprotected persons.
Environmental precautions	:	Do not flush into surface water or sanitary sewer system. Local authorities should be advised if significant spillages cannot be contained.
Methods and materials for containment and cleaning up	:	Soak up with inert absorbent material (e.g. sand, silica gel, acid binder, universal binder, sawdust). Keep in suitable, closed containers for disposal.

SECTION 7. HANDLING AND STORAGE

Advice on protection against fire and explosion	:	Normal measures for preventive fire protection.
Advice on safe handling	:	Avoid exceeding the given occupational exposure limits (see section 8). Do not get in eyes, on skin, or on clothing. For personal protection see section 8. Persons with a history of skin sensitization problems or asthma, allergies, chronic or recurrent respiratory disease should not be employed in any process in which this mixture is being used. Smoking, eating and drinking should be prohibited in the application area. Follow standard hygiene measures when handling chemical products.
Conditions for safe storage	:	Store in original container. Keep container tightly closed in a dry and well-ventilated place. Observe label precautions. Store in accordance with local regulations.

SECTION 8. EXPOSURE CONTROLS/PERSONAL PROTECTION

Ingredients with workplace control parameters

Components	CAS-No.	Value type (Form of exposure)	Control parameters / Permissible concentration	Basis

xylene	1330-20-7	TWA	100 ppm 435 mg/m3	OSHA Z-1
		TWA	100 ppm 435 mg/m3	OSHA Z-1
		TWA	100 ppm	ACGIH
		STEL	150 ppm	ACGIH
		STEL	150 ppm 655 mg/m3	OSHA P0
		TWA	100 ppm 435 mg/m3	OSHA P0
Quartz (SiO2)	14808-60-7	TWA (Respirable particulate matter)	0.025 mg/m3	ACGIH
		TWA (Respirable dust)	0.05 mg/m3	OSHA Z-1
		TWA (respirable)	10 mg/m3 / %SiO2+2	OSHA Z-3
		TWA (respirable)	250 mppcf / %SiO2+5	OSHA Z-3
		TWA (respirable dust fraction)	0.1 mg/m3	OSHA P0
		TWA (Respirable particulate matter)	0.025 mg/m3 (Silica)	ACGIH
		TWA (respirable dust fraction)	0.1 mg/m3	OSHA P0
		TWA (Respirable particulate matter)	0.025 mg/m3	ACGIH
		TWA (Respirable particulate matter)	0.025 mg/m3 (Silica)	ACGIH
ethylbenzene	100-41-4	TWA	100 ppm 435 mg/m3	OSHA Z-1
		TWA	100 ppm 435 mg/m3	OSHA P0
		STEL	125 ppm 545 mg/m3	OSHA P0
4,4'-methylenediphenyl diisocyanate	101-68-8	TWA	0.005 ppm	ACGIH
		C	0.02 ppm 0.2 mg/m3	OSHA Z-1
		C	0.02 ppm 0.2 mg/m3	OSHA P0

The above constituents are the only constituents of the product which have a PEL, TLV or other recommended exposure limit. At this time, the other constituents have no known exposure limits.

Engineering measures	:	Use of adequate ventilation should be sufficient to control worker exposure to airborne contaminants. If the use of this product generates dust, fumes, gas, vapor or mist, use process enclosures, local exhaust ventilation or other engineering controls to keep worker exposure below any recommended or statutory limits.
Personal protective equipment		
Respiratory protection	:	Use a properly fitted NIOSH approved air-purifying or air-fed respirator complying with an approved standard if a risk assessment indicates this is necessary. The filter class for the respirator must be suitable for the maximum expected contaminant concentration (gas/vapor/aerosol/particulates) that may arise when handling the product. If this concentration is exceeded, self-contained breathing apparatus must be used.
Hand protection	:	Chemical-resistant, impervious gloves complying with an approved standard should be worn at all times when handling chemical products if a risk assessment indicates this is necessary.
Eye protection	:	Safety eyewear complying with an approved standard should be used when a risk assessment indicates this is necessary.
Skin and body protection	:	Choose body protection in relation to its type, to the concentration and amount of dangerous substances, and to the specific work-place.
Hygiene measures	:	Avoid contact with skin, eyes and clothing. Wash hands before breaks and immediately after handling the product. Remove contaminated clothing and protective equipment before entering eating areas. Wash thoroughly after handling.

SECTION 9. PHYSICAL AND CHEMICAL PROPERTIES

Appearance	:	paste
Color	:	various
Odor	:	aromatic
Odor Threshold	:	No data available
pH	:	Not applicable
Melting point/range / Freezing point	:	No data available
Boiling point/boiling range	:	No data available
Flash point	:	Not applicable
Evaporation rate	:	No data available
Flammability (solid, gas)	:	No data available
Upper explosion limit / Upper	:	No data available

flammability limit		
Lower explosion limit / Lower flammability limit	:	No data available
Vapor pressure	:	0.01 hpa
Relative vapor density	:	No data available
Density	:	ca. 1.51 g/cm3 (73 °F / 23 °C)
Solubility(ies)		
Water solubility	:	insoluble
Solubility in other solvents	:	No data available
Partition coefficient: n-octanol/water	:	No data available
Autoignition temperature	:	No data available
Decomposition temperature	:	No data available
Viscosity		
Viscosity, dynamic	:	No data available
Viscosity, kinematic	:	> 20.5 mm2/s
Explosive properties	:	No data available
Oxidizing properties	:	No data available
Volatile organic compounds (VOC) content	:	37 g/l

SECTION 10. STABILITY AND REACTIVITY

Reactivity	:	No dangerous reaction known under conditions of normal use.
Chemical stability	:	The product is chemically stable.
Possibility of hazardous reactions	:	Stable under recommended storage conditions.
Conditions to avoid	:	No data available
Incompatible materials	:	No data available
Hazardous decomposition products	:	No decomposition if stored and applied as directed.

SECTION 11. TOXICOLOGICAL INFORMATION

Acute toxicity

Not classified based on available information.

Components:

xylene:

Acute oral toxicity	:	LD50 Oral (Rat): 3,523 mg/kg

Acute dermal toxicity : LD50 Dermal (Rabbit): 1,700 mg/kg

ethylbenzene:

Acute oral toxicity : LD50 Oral (Rat): 3,500 mg/kg

Acute dermal toxicity : LD50 Dermal (Rabbit): 5,510 mg/kg

Toluene diisocyanate, oligomeric reaction products with 2,2'-oxydiethanol and propylidenetrimethanol:

Acute oral toxicity : LD50 Oral (Rat): > 5,000 mg/kg

4,4'-methylenediphenyl diisocyanate:

Acute inhalation toxicity : Acute toxicity estimate: 1.5 mg/l
Test atmosphere: dust/mist
Method: Expert judgment

Skin corrosion/irritation

Not classified based on available information.

Serious eye damage/eye irritation

Not classified based on available information.

Respiratory or skin sensitization

Skin sensitization

May cause an allergic skin reaction.

Respiratory sensitization

May cause allergy or asthma symptoms or breathing difficulties if inhaled.

Germ cell mutagenicity

Not classified based on available information.

Carcinogenicity

May cause cancer by inhalation.

IARC	Group 1: Carcinogenic to humans	
	Quartz (SiO2) (Silica dust, crystalline)	14808-60-7
	Group 2B: Possibly carcinogenic to humans	
	titanium dioxide	13463-67-7
	Group 2B: Possibly carcinogenic to humans	
	Carbon black	1333-86-4
	Group 2B: Possibly carcinogenic to humans	
	ethylbenzene	100-41-4
OSHA	OSHA specifically regulated carcinogen	
	Quartz (SiO2) (crystalline silica)	14808-60-7
NTP	Known to be human carcinogen	
	Quartz (SiO2)	14808-60-7

(Silica, Crystalline (Respirable Size))

Reproductive toxicity

Not classified based on available information.

STOT-single exposure

Not classified based on available information.

STOT-repeated exposure

May cause damage to organs through prolonged or repeated exposure if inhaled.
Once sensitized, a severe allergic reaction may occur when subsequently exposed to very low levels.

Aspiration toxicity

Not classified based on available information.

Further information

Product:

Remarks : Carbon black (1333-86-4)
Animal Toxicity:
Rat, oral, duration 2 year
Effect: no tumors

Mouse, oral, duration 2 years
Effect: no tumors
Mouse, dermal, duration 18 months
Effect: no skin tumors
Rat, inhalation, duration 2 years
Target organ: lungs
Effect: inflammation, fibrosis, tumors
Note: Tumors in the rat lung are considered to be related to the "particle overload phenomenon" rather than to a specific chemical effect of carbon black itself in the lung. These effects in rats have been reported in many studies on other poorly soluble inorganic particles and appear to be rat specific. Tumors have not been observed in other species (i.e., mouse and hamster) for carbon black or other poorly soluble particles under similar circumstances and study conditions. Mortality studies (human data): A study on carbon black production workers in the UK (Sorahan, 2001) found an increased risk of lung cancer in two of the five plant studied; however, the increase was not related to the dose of carbon black. Thus, the authors did not consider the increased risk in lung cancer to be due to carbon black exposure. A German study of carbon black workers at one plant (Morfeld, 2006; Buechte, 2006) found a similar increase in lung cancer risk but, like the Sorohan, 2001 (UK study) found no association with carbon black exposure. A large US study of 18 plants showed a reduction in lung cancer risk in carbon black production workers (DEll, 2006). Based upon these studies, the February 2006 Working Group at the International Agency for Research on Cancer (IARC) concluded that the human evidence for carcinogenicity was inadequate (IARC, 2010). Since the IARC evaluation of carbon black, Sorahan and Har-

rington (2007) have re-analyzed the UK study data using an alternative exposure hypothesis and found a positive association with carbon black exposure in two of the five plants. The same exposure hypothesis was applied by Morfeld and McCunney (2009) to the German cohort; in contrast, they found no association between carbon black exposure and lung cancer risk and, thus, no support for the alternative exposure hypothesis used by Sorahan and Harrington.
Overall, as a result of these detailed investigations, no causative link between carbon black exposure and cancer risk in humans has been demonstrated.
IARC CANCER CLASSIFICATION: In 2006 IARC re-affirmed its 1995 finding that there is "inadequate evidence" from human health studies to assess whether carbon black causes cancer in humans. IARC concluded that there is "sufficient evidence" in experimental animal studies for the carcinogenicity of carbon black. IARC's overall evaluation is that carbon black is "possibly carcinogenic to humans" (Group 2B)". This conclusion was based on IARC's guidelines, which generally require such a classification if one species exhibits carcinogenicity in two or more animal studies (IARC, 2010).

Solvent extracts of carbon black were used in one study of rats in which skin tumors were found after dermal application and several studies of mice in which sarcomas were found following subcutaneous injection. IARC concluded that there was "sufficient evidence" that carbon black extracts can cause cancer in animals (Group 2B).
ICGIH CANCER CLASSIFICATION: Confirmed Animal Carcinogen with Unknown Relevance to Humans (Category A3 Carcinogen).

ASSESSMENT: Applying the guidelines of self-classification under the Globally Harmonized System of Classification and Labeling of Chemicals, carbon black is not classified as a carcinogen. Lung tumors are induced in rats as a result of repeated exposure to inert, poorly soluble particles like carbon black and other poorly soluble particles. Rats tumors are a result of a secondary non-genotoxic mechanism that has questionable relevance for classification in humans. In support of this opinion, the CLP Guidance for Specific Target Organ Toxicity - Repeated Exposure (STOT-RE), cites lung overload under mechanisms not relevant to humans. Human health studies show that exposure to carbon black does not increase the risk to carcinogenicity.

Titanium dioxide (13463-67-7)
In lifetime inhalation studies of rats, airborne respirable-size titanium dioxide particles have shown to cause an increase in lung tumors at concentrations associated with substantial particle lung burdens and consequential pulmonary overload and inflammation. The potential for these adverse health effects appears to be closely related to the particle size and the amount of the exposed surface area that comes into contact

with the lung. However, tests with other laboratory animals such as mice and hamsters, indicate that rats are significantly more susceptible to the pulmonary overload and inflammation that causes lung cancer. Epidemiological studies do not suggest an increased risk of cancer in humans from occupational exposure to titanium dioxide. Titanium dioxide has been characterized by IARC as possibly carcinogenic to humans (Group 2B) through inhalation (not ingestion). It has not been characterized as a potential carcinogen by either NTP or OSHA.

Quartz (14808-60-7): This classification is relevant when exposed to Quartz (silicon dioxide) in dust or powder form only, including cured product that is subject to sanding, grinding, cutting, or other surface preparation activities.

SECTION 12. ECOLOGICAL INFORMATION

Ecotoxicity

Components:

ethylbenzene:

Persistence and degradability

No data available

Bioaccumulative potential

No data available

Mobility in soil

No data available

Other adverse effects

Product:

Additional ecological information	:	Do not empty into drains; dispose of this material and its container in a safe way. Avoid dispersal of spilled material and runoff and contact with soil, waterways, drains and sewers.

SECTION 13. DISPOSAL CONSIDERATIONS

Disposal methods

Waste from residues	:	Disposal of this product, solutions and any by-products should at all times comply with the requirements of environmental protection and waste disposal legislation and any regional local authority requirements.
Contaminated packaging	:	Empty containers should be taken to an approved waste handling site for recycling or disposal.

SECTION 14. TRANSPORT INFORMATION

International Regulations

IATA-DGR
Not regulated as a dangerous good

IMDG-Code
Not regulated as a dangerous good

Domestic regulation

49 CFR
Not regulated as a dangerous good

SECTION 15. REGULATORY INFORMATION

TSCA list : All chemical substances in this product are either listed on the TSCA Inventory or are in compliance with a TSCA Inventory exemption.

EPCRA - Emergency Planning and Community Right-to-Know

CERCLA Reportable Quantity
This material does not contain any components with a CERCLA RQ.

SARA 304 Extremely Hazardous Substances Reportable Quantity
This material does not contain any components with a section 304 EHS RQ.

SARA 302 Extremely Hazardous Substances Threshold Planning Quantity
This material does not contain any components with a section 302 EHS TPQ.

SARA 311/312 Hazards : Respiratory or skin sensitization
Carcinogenicity
Specific target organ toxicity (single or repeated exposure)

SARA 313 : The following components are subject to reporting levels established by SARA Title III, Section 313:

xylene	1330-20-7	>= 1 - < 5 %
ethylbenzene	100-41-4	>= 0.1 - < 1 %

Clean Air Act
The following chemical(s) are listed as HAP under the U.S. Clean Air Act, Section 112 (40 CFR 61):

xylene	1330-20-7	>= 1 - < 5 %

California Prop 65 ⚠ **WARNING:** Cancer and Reproductive Harm - www.P65Warnings.ca.gov

SECTION 16. OTHER INFORMATION

Full text of other abbreviations

ACGIH	:	USA. ACGIH Threshold Limit Values (TLV)
OSHA P0	:	USA. OSHA - TABLE Z-1 Limits for Air Contaminants - 1910.1000
OSHA Z-1	:	USA. Occupational Exposure Limits (OSHA) - Table Z-1 Limits for Air Contaminants
OSHA Z-3	:	USA. Occupational Exposure Limits (OSHA) - Table Z-3 Mineral Dusts
ACGIH / TWA	:	8-hour, time-weighted average
ACGIH / STEL	:	Short-term exposure limit
OSHA P0 / TWA	:	8-hour time weighted average
OSHA P0 / STEL	:	Short-term exposure limit
OSHA P0 / C	:	Ceiling limit
OSHA Z-1 / TWA	:	8-hour time weighted average
OSHA Z-1 / C	:	Ceiling
OSHA Z-3 / TWA	:	8-hour time weighted average

Notes to Reader

The information contained in this Safety Data Sheet applies only to the actual Sika Corporation ("Sika") product identified and described herein. This information is not intended to address, nor does it address the use or application of the identified Sika product in combination with any other material, product or process. All of the information set forth herein is based on technical data regarding the identified product that Sika believes to be reliable as of the date hereof. Prior to each use of any Sika product, the user must always read and follow the warnings and instructions on the product's current Product Data Sheet, product label and Safety Data Sheet for each Sika product, which are available at web site and/or telephone number listed in Section 1 of this SDS.

SIKA MAKES NO WARRANTIES EXPRESS OR IMPLIED AND ASSUMES NO LIABILITY ARISING FROM THIS INFORMATION OR ITS USE. SIKA SHALL NOT BE LIABLE UNDER ANY LEGAL THEORY FOR SPECIAL OR CONSEQUENTIAL DAMAGES AND SHALL NOT BE RESPONSIBLE FOR THE USE OF THIS PRODUCT IN A MANNER TO INFRINGE ON ANY PATENT OR ANY OTHER INTELLECTUAL PROPERTY RIGHTS HELD BY OTHERS.

All sales of Sika products are subject to its current terms and conditions of sale available at www.sikausa.com or 201-933-8800.

Revision Date 01/20/2020

000000608991

US / Z8

SAFETY DATA SHEET

Deck Seal

Date Revised: JAN 2020

SECTION 1 – PRODUCT AND COMPANY IDENTIFICATION

PRODUCT NAME: Stone Edge Surfaces Deck Seal	**MANUFACTURER:** Turley International Resources, LLC.
PRODUCT USE: Concrete or Wood Deck Top Coat Waterproofing Sealer with a Matte Finish	4322 South 80th Street
SUPPLIER: N/A	Mesa, AZ 85212 - USA
	TEL: 844-786-6333 E: info@stoneedgesurfaces.com
EMERGENCY: Contact Local Hospital or call 911 in US	

SECTION 2 – HAZARDS IDENTIFICATION

CLASSIFICATION OF THE SUBSTANCE MIXTURE:

HAZARD CLASS	CATEGORY	HAZARD STATEMENTS
Acute Toxicity, Oral	5	Harmful or Fatal if swallowed
Acute Toxicity, Inhalation (Vapors)	5	Harmful or Fatal if Inhaled
Acute Toxicity, Dermal	1A	May be harmful in contact with skin.
Skin corrosion / irritation	1A	May cause skin irritation. May cause allergic reaction
Serious eye damage / Eye irritation	2B	May cause eye irritation, damage
Carcinogenicity	-	No Information Available
Specific target organ toxicity, single exposure	3	May cause respiratory, eye and skin irritation
Specific target organ toxicity, repeated exposure	-	No Information Available
Aspiration Toxicity	-	No Information Available
Flammable Liquid	1	Not Flammable
Hazardous to Aquatic Life	-	No Information Available

OSHA HAZARD COMMUNICATION STANDARD:	This chemical is not considered hazardous by the 2012 OSHA Hazard Communication Standard (29 CFR 1910.1200)

GHS LABEL ELEMENTS:	**SIGNAL WORD:** **Warning!**	**PICTOGRAM(S):**

PRECAUTIONARY STATEMENTS:

HEADING	OSHA Ref. #	Instructions
PREVENTION:	P201	Obtain special instruction before use.
	P202	Do not handle until all safety precautions have been read and understood.
	P233	Keep Container Tightly Closed
	P261	Avoid breathing dust/fumes/gas/mist/vapors/spray.
	P270	Do not eat, drink, and smoke when using this product.
	P271	Use only outdoors or in a well-ventilated area
	P272	Contaminated work clothing should not be allowed out of the workplace
	P280	Wear protective gloves/ protective clothing / eye protection/ face protection.
	P264	Wash exposed area with plenty of water and soap thoroughly after handling.
RESPONSE:	P301 + P330 + P312 + P331	IF SWALLOWED: Rinse mouth. Call a POISON CENTER or physician immediatel. DO NOT induce Vomiting
	P303 + P361 + P353 + P315	IF ON SKIN (or hair): Remove/Take off immediately all contaminated clothing. Rinse skin with water/shower. If you feel unwell Get immediate medical advice/attention
	P363	Wash contaminated clothing before reuse.
	P304 + P340 + P310	IF INHALED: Remove victim to fresh air and keep at rest in a position comfortable for breathing. Immediately call a POISON CENTER or doctor/ physician
	P305+ P351+ P338	IF IN EYES: Rinse cautiously with water for several minutes. Remove contact lenses, if present and easy to do. Continue rinsing. Seek Medical Attention if irritation persists
	P370 + P378	In case of fire use, "alcohol resistant" foam, dry chemical, halon or carbon dioxide to extinguish. Collect spillage
	P308 + P310 + P313	IF exposed or concerned: Get medical advice/attention. Immediately call a POISON CENTER or doctor/ physician.
STORAGE:	P403 + P404 + P235 + P405 + P233	Store in well Ventilated Place. Store in a Closed Container. Keep cool. Store Locked Up. Keep Container tightly closed
DISPOSAL:	P501	Dispose of contents/container to hazardous or special waste collection point in accordance with local/regional/national/international regulations

SECTION 3 – COMPOSITION / INFORMATION ON INGREDIENTS

Components	CAS #	EC #	Concentration, %	Trade Secret
Ethylene Glycol	107-21-1		.7 - .8	*
Titanium Dioxide	13463-67-7		3.9 – 1.0	*
Crystalline Silica (Quartz	14808-60-7		17.7 – 17.9	*

Non-Hazardous Ingredient(s)	-	-	Remainder	*
*The exact percentage (concentration) of composition has been withheld as a trade secret				

SECTION 4 – FIRST AID MEASURES

EMERGENCY INFORMATION:
Stone Edge Surfaces Pro Seal Supreme is a milky white liquid. Move person out of the dangerous area. Consult a physician. Provide this Safety Data Sheet to the doctor in attendance. Use exposure controls or personal protection methods described in Section 8.
Symptoms: Eye, Skin and respiratory Irritation.
Note to Physician: Treat symptomatically. For additional information, see Safety Data Sheet

EYES: Immediately flush eye thoroughly with water. Remove contacts if easy to do. Continue flushing eye for at least 15 minutes, including under lids. If eye irritation persists: Get medical advice/attention.
SKIN: Wash off with soap and plenty of water. If skin irritation occurs: Get medical advice or attention.
INHALATION: Remove person to fresh air. If breathing is difficult, administer oxygen. If not breathing, give artificial respiration. Seek medical help if coughing and other symptoms do not subside. Inhalation of large amounts require immediate medical attention.
INGESTION: Do not induce vomiting. If conscious, have victim drink plenty of water and call a physician immediately. Never give anything by mouth to an unconscious person

SECTION 5 – FIREFIGHTING MEASURES

SUITABLE EXTINGUISHING MEDIA:	Product is not combustible. Use water spray (fog), alcohol-resistant foam, dry chemical, or carbon dioxide for surrounding fire
UNSUITABLE EXTINGUISHING MEDIA:	Not applicable
SPECIFIC HAZARDS ARISING FROM THE CHEMICAL:	None known
HAZARDUS COMBUSTION PRODUCTS:	Carbon Dioxide, Carbon Monoxide
SPECIAL PROTECTIVE EQUIPMENT AND PRECAUTIONS FOR FIRE-FIGHTERS:	Wear self-contained breathing apparatus and protective suit. Closed containers may explode due to pressure caused by heat.

SECTION 6 – ACCIDENTAL RELEASE MEASURES

EMERGENCY PROCEDURES:	Keep unnecessary and unprotected personnel from entering spill area. Do not touch or walk through spilled material.
PROTECTIVE EQUIPMENT:	In case of spill wear appropriate personal protective equipment during any cleanup and response activities. Avoid skin contact and inhalation.
PROPER METHODS OF CONTAINMENT:	Prevent further leakage or spillage if safe to do so. Dike and contain spill with inert absorbent materials, (e.g. sand, earth, diatomaceous earth, vermiculite) and place in container for disposal according to local / national regulations (see Section 13. Dispose according to local regulations for hazardous waste.
CLEANUP:	Pick up and transfer to properly labeled containers
ENVIRONMENTAL PRECAUTIONS:	Prevent from entering into soil, ditches, sewers, waterways and/or groundwater, basements or confined areas. Large spills in waterways may be hazardous. Inform the relevant authorities if the product has accessed waterways or other natural areas. See Section 12 for more details.

SECTION 7 – HANDLING AND STORAGE

PRECAUTIONS FOR SAFE HANDLING:	Do not handle until all safety precautions have been read and understood. Avoid contact with skin and eyes. Avoid breathing dust/fume/gas/mist/vapors/spray. Wash hands and skin thoroughly after handling. Use only outdoors or in a well-ventilated area. Wear protective gloves/protective clothing/eye protection/face protection
PRECAUTIONS FOR STORAGE:	Keep at a temperature not exceeding 38 Degrees C (100 Degrees F). Do not allow material to freeze. Keep container tightly closed in a dry and well ventilated place. Containers which are opened must be carefully resealed and kept upright to prevent leakage.
INCOMPATIBILITIES:	None Known

SECTION 8 – PRECAUTIONS TO CONTROL EXPOSURE / PERSONAL PROTECTION

OSHA's PERMISSABLE EXPOSURE LIMITS (PEL)

Ingredient	CAS#	Weights	Exposure Limits
Ethylene Glycol	107-21-1	.7 - .8	**ACGIH C 100 MG/M³** **OSHA TLV-C 50 PPM**
Titanium Dioxide	13463-67-7	3.9 – 1.0	**OSHA PRL -TWA10 MG/M³ Total Dust** **OSHA PEL 5 MG/M³ Respirable fraction**
Crystalline Silica (Quartz	14808-60-7	17.7 – 17.9	**OSHA PEL .025 MG/M³ total Dust** **ACGIH 5 mg/m³ Respirable Dust**

ENGINEERING CONTROLS:	Local Exhaust preferable. General/Local ventilation acceptable.

PERSONAL PROTECTIVE EQUIPMENT (PPE).

RESPIRATORY PROTECTION:	Use respiratory protection unless adequate local exhaust ventilation is provided or exposure assessment demonstrates that exposures are within recommended exposure guidelines. Where concentrations are above recommended limits or are unknown, appropriate respiratory protection should be worn. Follow OSHA respirator regulations (29 CFR 1910.134) and use NIOSH/MSHA approved respirators
EYE PROTECTION:	Wear face shield or safety glasses with side shields or goggles
SKIN PROTECTION:	Wear impervious protective clothing, including boots, gloves, lab coat, apron or coveralls, as appropriate, to prevent skin contact. Wear chemical resistant gloves at minimum. Wash skin immediately upon contact. Wash hands at mealtime and end of shift. Handle in accordance with good industrial hygiene and safety practice. Wash hands before and after breaks and at the end of the work day.

SECTION 9 – PHYSICAL AND CHEMICAL PROPERTIES

SOLIDS BY VOLUME	44.0 +-1.5%		**APPERANCE:**	Milky White Liquid
ODOR & ODOR THRESHOLD:	Mild Slight Glue Smell		**FLASH POINT:**	100 Deg. C (212 Deg. F)
BOILING POINT:	100 Deg. C (212 Deg. F)		**MELTING POINT/Freezing Point:**	Melting N/A / Freezing 32 Deg. F
EVAPORATION RATE:	Slower than Ether		**FLAMMABILITY (SOLID/GAS)**	Not Relevant
VAPOR PRESSURE:	Not Available		**pH (IN WATER): (ASTM D 1293-95)**	Not Relevant
VAPOR DENSITY:	Heavier Than Air		**SOLUBILITY IN WATER:**	Soluble in Water
RELATIVE DENSITY	1.017 @ 70 Degrees F		**UPPER/LOWER FLAMMABILITY**	Not Flammable
PARTITION COEFFICIENT: n-octano/wtr.	Not Available		**AUTO IGNITION TEMPERATURE**	Not Available
WEIGHT/GALLON	10.85 – 11.05 lb/gal 1306-1330 g/l		**SPECIFIC GRAVITY**	1.303 – 1.327
VOLATILE ORGANIC COMPOUNDS (VOC THEORETICAL-AS PACKAGED	45.5 gl/l Less Water and Federally Exempt Solids			

SECTION 10 – STABILITY AND REACTIVITY

CHEMICAL STABILITY:	Stable
CHEMICAL REACTIVITY:	Hazardous Polymerization: Will not occur under normal conditions of storage and use Corrosion to Metals: No Data Available Oxidizing Properties: No Data Available
CONDITIONS TO AVOID:	None Known
INCOMPATIBILITY:	None Known
HAZARDOUS DECOMPOSITION:	By Fire: Carbon Dioxide, Carbon Monoxide

SECTION 11 – TOXOCOLOGY INFORMATION

CHRONIC HEALTH HAZARDS

IARC's Monograph No. 93 reports there is sufficient evidence of carcinogenicity in experimental rats exposed to titanium dioxide but inadequate evidence for carcinogenicity in humans and has assigned a Group 2B rating. In addition, the IARC summary concludes, "No significant exposure to titanium dioxide is thought to occur during the use of products in which titanium is bound to other materials, such as paint."

Crystalline Silica classified Group 2 by IARC

TOXICOLOGY DATA

CAS No.	Ingredient Name			
107-21-1	**Ethylene Glycol**			
		LC50 RAT Inhalation	6HR	2.5 mg/l
		LC50 RAT Oral		2,000 mg/kg
13463-67-7	**Titanium Dioxide**			
		LC50 RAT Oral		1,000 mg/kg
14808-60-7	**Crystalline Silica (Quartz)**			
		LC50 RAT Oral		>22,500 mg/kg

LIKELY ROUTES OF EXPOSURE:	Direct Contact with Skin, Eye and Ingestion, and Inhalation of vapors.

SYMPTOMS OF EXPOSURE:

Ingestion may cause nausea, vomiting and diarrhea. Exposure causes mild skin irritation. Exposure causes eye irritation. Depending on concentration of residual monomers (typically <0.1%), vapors can collect above the liquid in closed containers. These vapors may result in eye and upper respiratory tract irritation.

ACUTE TOXICITY	**INGESTION:**	Harmful or fatal if swallowed. Adverse symptoms may include, abdominal pain, nausea and diarrhea.
	INHALATION:	May cause respiratory tract irritation and coughing. Symptoms may include coughing, difficult breathing and chest pain.
	SKIN CORROSION SKIN IRRITATION	Irritating to skin
	IRRITATION	Irritating to eyes, respiratory system and skin
	EYE DAMAGE & IRRITATION	Irritating to eyes
	SPECIFIC TARGET ORGAN GENERAL TOXICITY SINGLE EXPOSURE:	This product contains components that may cause respiratory tract, eye and skin irritation after single exposure.
	SPECIFIC TARGET ORGAN GENERAL TOXICITY REPEAT EXPOSURE:	None known
	ASPIRATION HAZARD:	No Data Available

CHRONIC TOXICITY	**Respiratory and Skin Sensitizer:**	No Data Available
	Generative Cell Mutagenicity	No Data Available
	Carcinogenicity:	This product does contain carcinogens or potential carcinogens as listed by OSHA, IARC or NTP.

Reproductive Toxicity:	WARNING: This product contains chemicals known to the state of California to cause cancer and birth defects or other reproductive harm.
General Product Warning:	May be harmful or fatal if swallowed.

SECTIONS 12 – ECOLOGICAL INFORMATION

ECOTOXICITY	No Data Available
PERSISTENCE AND DEGRADABILITY:	No Data Available
BIOACCUMULATIVE POTENTIAL:	No Data Available
MOBILITY IN SOIL:	No Data Available
OTHER ADVERSE EFFECTS:	No Data Available
ECOTOXICITY TEST RESULTS: No Data is Available	

SECTION 13 – DISPOSAL CONSIDERATIONS

PRODUCT DISPOSAL:	Under RCRA 40 CFR 261 this material is not a hazardous waste. Dispose of in accordance with all federal, state, and local regulations. If uncertain of local requirements, contact the proper environmental authorities for information on waste disposal in your area. Contact a licensed professional waste disposal service to dispose of this material.
CONTAINER DISPOSAL:	Even after emptying, container may retain residues. Containers should be completely emptied and safely stored until appropriately reconditioned or dispose of (contents/container) in accordance with local/regional/national/international regulations.

SECTION 14 – TRANSPORTATION CONSIDERATIONS

Land transport, U.S. DOT:	Not Regulated	**IMO**	Not Regulated
Sea transport, IMDG	Not Regulated	**Canada (TDG)**	Not Regulated
Air transport, IATA/ICAO:	Not Regulated		

SECTION 15 – REGULATORY INFORMATION (Non-Mandatory Section as per OSHA: Not a Complete List)

INTERNATIONAL INVENTORIES

TSCA	United States Toxic Substances Control Act Section 8(b) Inventory	All Chemicals in this product are listed, or are exempt from listing, on the TSCA Inventory
DSL/NDSL	Canadian Domestic Substances List/Non-Domestic Substances List	Unknown if complies
EINECS/ELINCS	European Inventory of Existing Chemical Substances/European List of Notified Chemical Substances	Unknown if complies
ENCS	Japan Existing and New Chemical Substances	Unknown if complies
IECSC	China Inventory of Existing Chemical Substances	Unknown if complies
KECL	Korean Existing and Evaluated Chemical Substances	Unknown if complies
PICCS	Philippines Inventory of Chemicals and Chemical Substances	Unknown if complies
AICS	Australian Inventory of Chemical Substances	Unknown if complies

SARA 313	Section 313 of Title III of the Superfund Amendments and Reauthorization Act of 1986 (SARA). This product does contain a chemical which is subject to the reporting requirements of the Act and Title 40 of the Code of Federal Regulations, Part 372

SARA 313 (40 CFR 372.65C) SUPPLIER NOTIFICATION CHEMICAL/COMPOUND	**CAS No.**	**CHEMICAL/COMPOUND**	**% by WT**
	107-21-1	Ethylene Glycol	.74%

SARA 311/312 Hazard Categories	
Acute health hazard	Yes
Chronic Health Hazard	Yes
Fire hazard	No
Sudden release of pressure hazard	No
Reactive Hazard	No

US STATE REGULATIONS (If Known)

STATE	INFORMATION
CA Proposition 65	This product contains chemicals known to the state of California to cause cancer and birth defects or other reproductive harm
U.S. State Right-to-Know Regulations	Unknown
U.S. EPA Label Information	Unknown

SECTION 16 – OTHER INFORMATION

HAZARDOUS MATERIAL INFORMATION SYSTEM (HMIS)

NFPA/HMIS Definitions: 0-Least, 1-Slight, 2-Moderate, 3-High, 4-Extreme

B-Protective Equipment: Safety glasses, gloves

Health	**1**
Flammability	**0**
Reactivity	**0**
Personal Protection	**B**

OTHER INFORMATION:
SELLER MAKES NO WARRANTY, EXPRESS OR IMPLIED, CONCERNING THE PRODUCT OR THE MERCHANTABILITY OR FITNESS THEREOF FOR ANY PURPOSE OR CONCERNING THE ACCURACY OF ANY INFORMATION PROVIDED BY TURLEY INTERNATIONAL RSOURCES, LLC., except that the product shall conform to contracted specifications. The information provided herein was believed by TURLEY INTERNATIONAL RESOURCES, LLC. to be accurate at the time of preparation or prepared from sources believed to be reliable, but it is the responsibility of the user to investigate and understand other pertinent sources of information to comply with all laws and procedures applicable to the safe handling and use of the product and to determine the suitability of the product for its intended use. Buyer's exclusive remedy shall be for damages and no claim of any kind, whether as to product delivered or for non-delivery of product, failure of product due to manufacturers defect, and whether based on contract, breach of warranty, negligence, or otherwise shall be greater in amount than the purchase price of the quantity of product in respect of which damages are claimed. In no event shall Seller be liable for incidental or consequential damages or labor of any kind, whether Buyer's claim is based on contract, breach of warranty, negligence, manufacturers defect, product failure, or otherwise.
REVISED: January 26, 2020
REVISED BY: BG: Stone Edge Surfaces DECK SEAL SDS v1.2 0222020 – Word

End of sheet

SAFETY DATA SHEET

Pro Bond Ultra

Date Revised: March 2022

SECTION 1 – PRODUCT AND COMPANY IDENTIFICATION

PRODUCT NAME: Pro Bond Ultra	**MANUFACTURER:** Turley International Resources, LLC.
PRODUCT USE: Dry Cementitious Concrete Overlay Mix	4322 South 80th Street
SUPPLIER: N/A	Mesa, AZ 85212 - USA
	TEL: 844-786-6333 E: info@wetedge.com
EMERGENCY: Call 911 or seek medical assistance immediately	**Medical:** Call 911 or seek medical assistance immediately

SECTION 2 – HAZARDS IDENTIFICATION

CLASSIFICATION OF THE SUBSTANCE MIXTURE:

HAZARD CLASS	CATEGORY	HAZARD STATEMENTS
Acute Toxicity, Oral	4	Harmful if swallowed
Acute Toxicity, Dermal	5	May be harmful in contact with skin
Skin corrosion / irritation	1	Causes severe skin burns and eye damage
Serious eye damage / Eye irritation	1	Causes serious eye damage
Carcinogenicity	1A	May cause cancer by inhalation
Specific target organ toxicity, single exposure	3	May cause respiratory irritation
Specific target organ toxicity, repeated exposure	1	Causes damage to lungs and respiratory system, through prolonged or repeated exposure by inhalation. Causes damage to kidney and liver through prolonged or repeated exposure.

OSHA HAZARD COMMUNICATION STANDARD:	This product is a "Hazardous Chemical" as defined by the OSHA Hazard Communication Standard, 29 CFR 1910.1200.

GHS LABEL ELEMENTS:	**SIGNAL WORD:** DANGER	**PICTOGRAM(S):**

PRECAUTIONARY STATEMENTS:

HEADING	OSHA Ref. #	Instructions
PREVENTION:	P201	Obtain special instruction before use.
	P202	Do not handle until all safety precautions have been read and understood.
	P281	Use personal protective equipment as required.
	P271	Use only outdoors or in a well-ventilated area.
	P260	Do not breathe dusts or mists.
	P270	Do not eat, drink, and smoke when using this product.
	P280	Wear protective gloves/ protective clothing / eye protection/ face protection.
	P264	Wash exposed area with plenty of water and soap thoroughly after handling.
RESPONSE:	P301 + P330 + P312	IF SWALLOWED: Rinse mouth. Call a POISON CENTER or physician if you feel unwell.
	P331	Do not induce vomiting.
	P303 + P361 + P353	IF ON SKIN (or hair): Remove/Take off immediately all contaminated clothing. Rinse skin with water/shower.
	P363	Wash contaminated clothing before reuse.
	P304 + P340 + P310	IF INHALED: Remove victim to fresh air and keep at rest in a position comfortable for breathing. Immediately call a POISON CENTER or doctor/ physician
	P305+ P351+ P338	IF IN EYES: Rinse cautiously with water for several minutes. Remove contact lenses, if present and easy to do. Continue rinsing.
	P310	Immediately call a POISON CENTER or doctor/ physician.
	P308+ P313	IF exposed or concerned: Get medical advice/attention.
STORAGE:	P403 + P235 + P405	Store in a well-ventilated place. Keep cool. Store Locked Up
DISPOSAL:	P501	Dispose of contents/container to hazardous or special waste collection point in accordance with local/regional/national/international regulations

SECTION 3 – COMPOSITION / INFORMATION ON INGREDIENTS

Components	CAS #	EC #	Concentration, %
Vinyl based polymers	9002-89-5	Not available	1-5
Portland Cement	65997-15-1	Not available	20 – 60
Pozzolonic additives (silicon based)	14808-60-7	238-878-4	10 – 40
Calcium Sulfate	13397-24-5	603-783-2	1 – 5
Calcium Carbonate	1317-65-3	215-279-6	1 – 5
Trace Elements:	Some of Stone Edge Surfaces Pro Bond Ultra is made from materials mined from the earth and is processed using energy provided by fuels. Trace amounts of naturally occurring, potentially harmful chemical might be detected during chemical analysis. For example, Portland cement may contain up to 1.50 % insoluble residue, some of which may be free crystalline silica. Other trace constituents may include calcium oxide, free magnesium oxide, potassium and sodium sulfate compounds, and trace metal compounds.		

SECTION 4 – FIRST AID MEASURES

EMERGENCY INFORMATION: **Stone Edge Surfaces Pro Bond Ultra Mix** is a gray or white cementitious mixture of cement, sand, silica, and Hydrated Magnesium-Aluminum-Iron-Silicate. When in contact with moisture in eyes or on skin, or when mixed with water, it becomes highly caustic (pH>12) and will damage or burn (as severely as third degree) the eyes or skin. Inhalation may cause irritation to the moist mucous membranes of the nose, throat and upper respiratory system or may cause or may aggravate certain lung diseases or conditions. Use exposure controls or personal protection methods described in Section 8.	**EYES:** Immediately flush eye thoroughly with water. Continue flushing eye for at least 15 minutes, including under lids, to remove all particles. Call physician immediately. **SKIN:** Wash skin with cool water and pH-neutral soap or a mild detergent. Seek medical treatment if irritation or inflammation develops or persists. Seek immediate medical treatment in the event of burns. **INHALATION:** Remove person to fresh air. If breathing is difficult, administer oxygen. If not breathing, give artificial respiration. Seek medical help if coughing and other symptoms do not subside. Inhalation of large amounts of product require immediate medical attention. **INGESTION:** Do not induce vomiting. If conscious, have victim drink plenty of water and call a physician immediately.

SECTION 5 – FIREFIGHTING MEASURES

SUITABLE EXTINGUISHING MEDIA:	Use an extinguishing agent suitable for the surrounding fire.
UNSUITABLE EXTINGUISHING MEDIA:	Do not use water jet and halogenated compounds
SPECIFIC HAZARDS ARISING FROM THE CHEMICAL:	This product is non-flammable and non-combustible. Containers at risk from fire should be cooled with water spray and, if possible, removed from the danger area.
HAZARDUS COMBUSTION PRODUCTS:	None.
SPECIAL PROTECTIVE EQUIPMENT AND PRECAUTIONS FOR FIRE-FIGHTERS:	Firefighters should wear full protective gear.

SECTION 6 – ACCIDENTAL RELEASE MEASURES

EMERGENCY PROCEDURES:	Keep unnecessary and unprotected personnel from entering spill area. Do not touch or walk through spilled material.
PROTECTIVE EQUIPMENT:	Use exposure control and personal protection methods as described in Section 8. Ensure adequate ventilation/exhaust extraction. Avoid inhalation of dust and contact with skin and eyes during clean up.
PROPER METHODS OF CONTAINMENT:	Collect dry material using a scoop. Avoid actions that cause dust to become airborne. Do not dry sweep. Avoid inhalation of dust and contact with skin. Vacuum dust with equipment fitted with HEPA filter and place in a designated labeled waste container. If material is wet, scrape up wet material and place in an appropriate container. Allow the material to dry before disposal. For major spills: approach from upwind. Prevent wind dispersal.
CLEANUP:	Seal the container(s), remove from spill area and properly dispose of the waste material in accordance with existing federal, state and local regulations.
ENVIRONMENTAL PRECAUTIONS:	Prevent from entering into soil, ditches, sewers, waterways and/or groundwater, basements or confined areas. Large spills in waterways may be hazardous due to alkalinity of the certain components of the product. Inform the relevant authorities if the product has accessed waterways or other natural areas. See Section 12 for more details.

SECTION 7 – HANDLING AND STORAGE

PRECAUTIONS FOR SAFE HANDLING:	Do not breathe dust. Use adequate ventilation and/or dust collection methods. Use all available work practices to control dust exposures, such as water sprays. Do not permit dust to collect on walls, floors, sills, ledges, machinery, or equipment. Avoid breakage of bagged material or spills of bulk material. Wear appropriate respiratory, eye and skin protection. Avoid contact with skin and eyes. Wash hands thoroughly after handling. Eating, drinking and smoking should be prohibited in areas where this material is handled, stored and processed. Hands and/or face should be washed before eating, drinking and smoking and at the end of the shift. Remove contaminated clothing and protective equipment before entering eating areas. Wash or vacuum clothing when becomes dusty. Persons with a history of skin sensitization problems should not be employed in any process in which this product is used. Avoid exposure by obtaining and following special instructions before use. Do not handle until all safety precautions have been read and understood.
PRECAUTIONS FOR STORAGE:	Store in original or approved alternative container protected from direct sunlight in a dry, cool and well-ventilated area away from incompatible materials (see below for details) and food and drink. Keep container tightly closed and sealed until ready for use. Containers that have been opened must be carefully resealed. Store bags to avoid accidental tearing, breaking, or bursting. Avoid windblown dust by shielding or covering outdoor stockpiles. Protect from getting wet from atmospheric moisture and other sources.
INCOMPATIBILITIES:	- **Silica** reacts violently with powerful oxidizing agents such as hydrofluoric acid, fluorine, boron trifluoride, chlorine trifluoride, manganese trifluoride, oxygen difluoride, hydrogen peroxide, acetylene, ammonia yielding possible fire and/or explosions. Silicates dissolve readily in hydrofluoric acid producing a corrosive gas silicon tetrafluoride. - **Portland Cement** is highly alkaline and will react with acids to produce a violent, heat-generating reaction. Released toxic gases or vapors will depend on the acid involved. Aluminum powder and other alkali and alkaline earth elements will react in wet mortar or concrete, liberating hydrogen gas. Reacts slowly with water forming hydrated compounds, releasing heat and producing a strong alkaline solution until reaction is substantially complete. - **Calcium Sulfate :** Reacts with Aluminum (at high temperatures), diazomethane. - **Calcium Carbonate :** ignites on contact with fluorine and is incompatible with acids, alum, ammonium salts, and magnesium

SECTION 8 – PRECAUTIONS TO CONTROL EXPOSURE / PERSONAL PROTECTION

OSHA's PERMISSABLE EXPOSURE LIMITS (PEL)

COMPONENTS	CAS #	OSHA PEL mg/m³[(e)]	Cal/OSHA PEL 8-hour TWA, mg/m³	NIOSH REL Up to 10-hour TWA, mg/m³	ACGIH 2017 TLV 8hrs TWA, mg/m³
Vinyl based polymers	9002-89-5	n/a	n/a	n/a	n/a
Portland Cement:	65997-15-1	(Total Dust) 10 (Respirable fraction) 5	(Total Dust) 10 mg/m³ (Respirable fraction) 5 mg/m³	(Total Dust) 10 mg/m³ (Respirable fraction) 5 mg/m³	1 mg/m³ (no asbestos & < 1% crystalline silica)
Calcium Sulfate		(Total Dust) 15 (Respirable fraction) 5	(Total Dust) 10 mg/m³ (Respirable fraction) 5	(Total Dust) 10 mg/m³ (Respirable fraction) 5	No Data
Calcium Carbonate	1317-65-3	15	10 mg/m³	10 mg/m³	No Data
Pozzolonic additives (silicon based)	14808-60-7	No Data	.05 mg/m³	.05 mg/m³	.025 mg/m³

ENGINEERING CONTROLS:	Avoid actions that cause dust to become airborne. Use local exhaust or general dilution ventilation to control exposure within applicable limits.

PERSONAL PROTECTIVE EQUIPMENT (PPE).

RESPIRATORY PROTECTION:	Use local exhaust or general dilution ventilation to control dust levels below applicable exposure limits. Minimize dispersal of dust into air. If local or general ventilation is not adequate to control dust levels below applicable exposure limits or when dust causes irritation or discomfort, use MSHA/NIOSH approved respirators.
EYE PROTECTION:	Wear safety glasses with side shields or goggles to avoid contact with eyes. In extreme dusty environments and unpredictable environments, wear tight fitting unvented or indirectly vented goggles to avoid eye irritation or injury. Contact lenses should not be worn when handling cement or cement containing products.
SKIN PROTECTION:	Wear impervious abrasion and alkali-resistant gloves, boots, long sleeve shirt, long pants or other protective clothing to prevent skin contact. Promptly remove clothing dusty with Wall Mix or clothing dampened with moisture mixed with Wall mix, and launder before re-use. If contact occurs, wash areas contacted by material with pH neutral soap and water.

SECTION 9 – PHYSICAL AND CHEMICAL PROPERTIES

VISCOSITY	Not Applicable		**APPERANCE:**	Gray or White fine powder
ODOR & ODOR THRESHOLD:	Odorless		**FLASH POINT:**	Not Applicable, Not Flammable, Not Combustible
BOILING POINT:	>1000°C		**MELTING POINT:**	>1000°C
EVAPORATION RATE:	Not Applicable		**FLAMMABILITY (SOLID/GAS)**	Not Applicable
VAPOR PRESSURE:	Not applicable		**pH (IN WATER): (ASTM D 1293-95)**	12-13
VAPOR DENSITY:	Not applicable		**SOLUBILITY IN WATER:**	Slightly (0.1%-1.0%)
RELATIVE DENSITY	Not Applicable		**UPPER/LOWER FLAMMABILITY**	Not Flammable, Not Explosive
PARTITION COEFFICIENT: n-octano/wtr.	Not Applicable		**AUTO IGNITION TEMPERATURE**	Not Flammable

SECTION 10 – STABILITY AND REACTIVITY

CHEMICAL STABILITY:	Product is stable under recommended storage conditions. Keep dry until used.
CHEMICAL REACTIVITY:	Hazardous Polymerization: Will not occur. Corrosion to Metals: Has corrosive effects to metal. Oxidizing Properties: Not classified as oxidizing.
CONDITIONS TO AVOID:	Unintentional contact with water or high humidity. Contact with water will result in hydration and produces (caustic) calcium hydroxide and heat. Avoid generation of dust.
INCOMPATIBILITY:	- **Silica** reacts violently with powerful oxidizing agents such as hydrofluoric acid, fluorine, boron trifluoride, chlorine trifluoride, manganese trifluoride, oxygen difluoride, hydrogen peroxide, acetylene, ammonia yielding possible fire and/or explosions. Silicates dissolve readily in hydrofluoric acid producing a corrosive gas silicon tetrafluoride. - **Portland Cement** is highly alkaline and will react with acids to produce a violent, heat-generating reaction. Released toxic gases or vapors will depend on the acid involved. Aluminum powder and other alkali and alkaline earth elements will react in wet mortar or concrete, liberating hydrogen gas. Reacts slowly with water forming hydrated compounds, releasing heat and producing a strong alkaline solution until reaction is substantially complete. - **Calcium Sulfate :** Reactive with oxidizing agents, acids. Incompatible with aluminum and diazomethane. - **Calcium Carbonate :** ignites on contact with fluorine and is incompatible with acids, alum, ammonium salts, and magnesium
HAZARDOUS DECOMPOSITION:	Will not spontaneously occur. Adding water results in hydration and produces (caustic) calcium hydroxide. Under normal conditions of storage and use, hazardous decomposition products should not be produced. In fire conditions, depending on temperature, air supply and presence of other materials, decomposition products can include, but are not limited to carbon dioxide, carbon monoxide, silica oxides, sulfur oxides, metal oxides.

SECTION 11 – TOXOCOLOGY INFORMATION

LIKELY ROUTES OF EXPOSURE:	Skin and Eye Contact, Inhalation and Ingestion.

SYMPTOMS OF EXPOSURE:

ACUTE TOXICITY	**INGESTION:**	Harmful if swallowed. Adverse symptoms may include burns to mouth, throat and stomach, abdominal pain, nausea and diarrhea. Although inadvertent ingestion of small quantities of wet concrete or its dry ingredients are not known to be harmful, ingestion of larger quantities can be harmful and requires immediate medical attention
	INHALATION:	May cause respiratory tract irritation and coughing. Some ingredients may contain trace amounts of crystalline silica. Exposure to these ingredients in excess of the applicable TLV or PEL (see Section 2) may cause or aggravate other lung conditions. Exposure to Portland cement may cause irritation to the moist mucous membranes of the nose, throat, and upper respiratory system. It may also leave unpleasant deposits in the nose. May cause allergy or asthma symptoms or breathing difficulties if inhaled.
	SKIN CORROSION SKIN IRRITATION	Exposure during the handling or mixing of the dry ingredients may cause drying of the skin with consequent mild irritation or more significant effects attributable to aggravation of other conditions. Exposure to wet concrete may cause more severe skin effects including thickening, cracking, or fissuring of the skin. Prolonged exposure can cause severe skin damage in the form of (caustic) chemical burns. May cause skin burns. A more severe response may be expected if skin is abraded (scratched or cut). The response may appear in a variety of forms ranging from a mild rash to severe skin ulcers. Persons already sensitized may react to their first contact with the product. Other persons may first experience this effect after years of contact.
	SERIOUS EYE DAMAGE & IRRITATION	Wet or Dry product may cause serious eye damage. Adverse symptoms may include tearing, redness, pain and in the worst case blindness. Dust may cause abrasion of the cornea. wet concrete may cause effects ranging from moderate eye irritation to chemical burns and blindness
	SPECIFIC TARGET ORGAN GENERAL TOXICITY: SINGLE EXPOSURE:	This product contains components that may cause respiratory tract irritation after single exposure.
	SPECIFIC TARGET ORGAN GENERAL TOXICITY: REPEAT EXPOSURE	This product contains components that may cause respiratory tract irritation (asthma, bronchitis, emphysema, and chronic obstructive pulmonary disease), lung disease or lung cancer, kidney disease, tuberculosis, silicosis, autoimmune and kidney diseases after prolonged and repeat exposure to airborne free respirable crystalline silica if product is handled without adequate protection.
	ASPIRATION HAZARD:	Not an aspiration hazard.

CHRONIC TOXICITY	**Respiratory and Skin Sensitizer:**	This product contains trace amounts of chemical (impurity) that is reported to be a skin sensitizer: present in Portland Cement at level <0.1%		
	Generative Cell Mutagenicity	Risk to humans is not expected from exposure to this product		
	Carcinogenicity:	**This product contains components reported to be carcinogenic to humans. Group 1).**	Pozzolonic additives (silicon based) CAS #: 14808-60-7:	IARC: Group 1 (Carcinogenic to humans) NTP: Known to be a Human Carcinogen (Respirable size) ACGIH: Group A2 (Suspected Human Carcinogen) NIOSH: Potential occupational carcinogen
			Portland Cement CAS # 65997-15-1	ACGIH: A4 - Not Classifiable as a Human Carcinogen
			Crystalline Silica (QUARTZ), CAS #: 14808-60-7:	IARC: Group 1 (Carcinogenic to humans) NTP: Known to be a Human Carcinogen (Respirable size) ACGIH: Group A2 (Suspected Human Carcinogen) NIOSH: Potential occupational carcinogen
			Amorphous Silica, CAS #: 7631-86-9:	IARC: Group 3 (Not Classifiable as to its Carcinogenicity to Humans)
			Chromium (VI) Compounds, CAS #: 18540-29-9:	IARC: Group 1 (Carcinogenic to humans)
			Titanium dioxide, CAS #: 13463-67-7:	IARC: Group 2B (Possibly Carcinogenic to Humans) ACGIH: Not classifiable as human carcinogen
Reproductive Toxicity:	Risk to humans is not expected from exposure to this product. However, this product contains trace amounts of chemical (impurities) that are reported to cause developmental issues. Chromium (VI) Compounds, CAS #: 18540-29-9 and Methyl alcohol, CAS #: 67-56-1			

General Product Warning:	May cause cancer. Prolonged and repeated exposure to airborne free respirable crystalline silica can result in lung disease and/or lung cancer. IARC states that crystalline silica in the form of quartz or cristobalite from occupational sources is carcinogenic to humans (Group 1).

SECTIONS 12 – ECOLOGICAL INFORMATION

ECOTOXICITY	Not classified as environmentally hazardous. However, this does not exclude the possibility that large or frequent spills can have a harmful or damaging effect on the environment.
PERSISTENCE AND DEGRADABILITY:	No information available for the product, believed to be not readily biodegradable by OECD criteria.
BIOACCUMULATIVE POTENTIAL:	No information is available for the product, but it is believed that no significant accumulation in organisms is expected
MOBILITY IN SOIL:	No information is available for the product, but it is believed that mobility in soil is not expected
OTHER ADVERSE EFFECTS:	No information is available for the product

ECOTOXICITY TEST RESULTS: No information is available for this product mixture. Results for components, where available:

Pozzolonic additives (silicon based)CAS #: 14808-60-7	Not known to be ecotoxic; no data suggests that is toxic to birds, fish, invertebrates, microorganisms or plants.
Calcium Sulfate CAS #:13397-24-5	Not classified as environmentally hazardous; However, this does not exclude harmful or damaging effect on the environment in the case of large or frequent spills. Fish: LC50 (Fathead minnow), 96hrs: >1970 mg/L. Biodegradability: Not applicable for the salt of inorganic compounds. Bioaccumulation: not expected. Mobility in Soil: a low potential for adsorption to soil; however, it dissolves in presence of water.
Calcium Carbonate CAS #: 1317-65-3	Acute toxicity Fish LC50 (Rainbow Trout), 96hrs: >10,000 mg/L Aquatic invertebrates EC50 (Daphnia magna), 48hrs: >1,000 mg/L Aquatic plants EC50 (Algae), 72hrs: >200 mg/L In solid state, this mineral is a major part of the rocks of earth's surface and is not biodegradable. Negative effect on environment should be therefore excluded. It is dissolved in a natural state and indispensable part of natural waters. Concentrated suspensions of minerals in natural waters may have an unfavorable effect on water organisms.

SECTION 13 – DISPOSAL CONSIDERATIONS

PRODUCT DISPOSAL:	The generation of waste should be avoided or minimized wherever possible. If product becomes a waste, it does not meet criteria of hazardous waste as defined in 40 CFR 261, Subpart C and D. Do not discharge or dump material into sewer system, the ground or bodies of water. Spill cleanup residues may still be subject to RCRA storage and disposal requirements. Dispose waste in compliance with local, state and federal regulations via licensed waste disposal contractor. See Section 7 for Handling Procedures. See Section 8 for Personal Protective Equipment recommendations
CONTAINER DISPOSAL:	Even after emptying, container may retain residues. Containers should be completely emptied and safely stored until appropriately reconditioned or dispose of (contents/container) in accordance with local/regional/national/international regulations.

SECTION 14 – TRANSPORTATION CONSIDERATIONS

Land transport, U.S. DOT:	Non-Regulated
Sea transport, IMDG	Non-Regulated
Air transport, IATA/ICAO:	Non-Regulated

SECTION 15 – REGULATORY INFORMATION (Non-Mandatory Section as per OSHA: Not a Complete List)

U.S. REGULATIONS

OSHA HCS:	This product is a "Hazardous Chemical" as defined by the OSHA Hazard Communication Standard, 29CFR 1910.1200.
TSCA REGULATIONS:	All components of this product are listed or are exempt from TSCA Inventory requirements under 40 CFR 720.30
EPCRA Section 302 (40 CFR Part 355)	(Emergency Response Planning, Extremely Hazardous Substance): No components are subject to the reporting.
EPCRA Section 304 (40 CFR Part 355	(Emergency Release Notification Requirements): No components are subject to the reporting.
EPCRA Sections 311 & 312	(Hazardous Chemical Inventory Reporting, Hazard Categories): Acute Health Hazard, Chronic Health Hazard
EPCRA Section 313 40 CFR Part 372)	(Toxic Chemical Release Inventory Reporting): No components or impurities of this product are present above De Minimis level and therefore do not require reporting.
CERCLA Sections 102-103 (40 CFR Part 302)	(Hazardous Substances Release Notification): No components are subject to the reporting. Some of the components contain trace amounts of the following chemicals that require reporting if a criterion of reportable quantity is fulfilled: Fine Mineral Fibers of average diameter ≤1µm (including Crystalline Silica, CAS #: 14808-60-7 with diameter ≤1µm)
CLEAN AIR ACT	Ozone Depleting Substances (ODS): This product does not contain and is not manufactured with ozone depleting substances. Hazardous Air Pollutants, OSHA, Section 112(b), Table Z-1 and Table Z-3:

COMPONENT ANALYSIS - STATE

STATE	INFORMATION
CA	The following statement(s) are provided under the California Safe Drinking Water and Toxic Enforcement Act of 1986 (Proposition 65): **WARNING!** This product contains chemicals known to the state of California to cause cancer, birth defects, or other reproductive harm.

SECTION 16 – OTHER INFORMATION

HAZARDOUS MATERIAL INFORMATION SYSTEM (HMIS)
NFPA/HMIS Definitions: 0-Least, 1-Slight, 2-Moderate, 3-High, 4-Extreme
E-Protective Equipment: Safety glasses, gloves, Dust Respirator

Health	**1**
Flammability	**0**
Reactivity	**0**
Personal Protection	**E**

OTHER INFORMATION:
SELLER MAKES NO WARRANTY, EXPRESS OR IMPLIED, CONCERNING THE PRODUCT OR THE MERCHANTABILITY OR FITNESS THEREOF FOR ANY PURPOSE OR CONCERNING THE ACCURACY OF ANY INFORMATION PROVIDED BY TURLET INTERNATIONAL RSOURCES, LLC., except that the product shall conform to contracted specifications. The information provided herein was believed by TURLEY INTERNATIONAL RESOURCES, LLC. to be accurate at the time of preparation or prepared from sources believed to be reliable, but it is the responsibility of the user to investigate and understand other pertinent sources of information to comply with all laws and procedures applicable to the safe handling and use of the product and to determine the suitability of the product for its intended use. Buyer's exclusive remedy shall be for damages and no claim of any kind, whether as to product delivered or for non-delivery of product, failure of product due to manufacturers defect, and whether based on contract, breach of warranty, negligence, or otherwise shall be greater in amount than the purchase price of the quantity of product in respect of which damages are claimed. In no event shall Seller be liable for incidental or consequential damages or labor of any kind, whether Buyer's claim is based on contract, breach of warranty, negligence, manufacturers defect, product failure, or otherwise.

Rest of Sheet Purposely Left Blank

END OF SHEET

SAFETY DATA SHEET

Pro Bond

Date Revised: Sept 2018

SECTION 1 – PRODUCT AND COMPANY IDENTIFICATION

PRODUCT NAME: Pro Bond	**MANUFACTURER:** Turley International Resources, LLC.
PRODUCT USE: Dry Cementitious Stamped/Decorative Concrete Overlay Mix	4322 South 80th Street
SUPPLIER: N/A	Mesa, AZ 85212 - USA
	TEL: 844-786-6333 E: info@wetedge.com
EMERGENCY: Contact Local Hospital or call 911 in US	

SECTION 2 – HAZARDS IDENTIFICATION

CLASSIFICATION OF THE SUBSTANCE MIXTURE:

HAZARD CLASS	CATEGORY	HAZARD STATEMENTS
Acute Toxicity, Oral	4	Harmful if swallowed
Acute Toxicity, Dermal	5	May be harmful in contact with skin
Skin corrosion / irritation	1	Causes severe skin burns and eye damage
Serious eye damage / Eye irritation	1	Causes serious eye damage
Carcinogenicity	1A	May cause cancer by inhalation
Specific target organ toxicity, single exposure	3	May cause respiratory irritation
Specific target organ toxicity, repeated exposure	1	Causes damage to lungs and respiratory system, through prolonged or repeated exposure by inhalation. Causes damage to kidney and liver through prolonged or repeated exposure.

OSHA HAZARD COMMUNICATION STANDARD:	This product is a "Hazardous Chemical" as defined by the OSHA Hazard Communication Standard, 29 CFR 1910.1200.

GHS LABEL ELEMENTS:	**SIGNAL WORD:** DANGER	**PICTOGRAM(S):**

PRECAUTIONARY STATEMENTS:

HEADING	OSHA Ref. #	Instructions
PREVENTION:	P201	Obtain special instruction before use.
	P202	Do not handle until all safety precautions have been read and understood.
	P281	Use personal protective equipment as required.
	P271	Use only outdoors or in a well-ventilated area.
	P260	Do not breathe dusts or mists.
	P270	Do not eat, drink, and smoke when using this product.
	P280	Wear protective gloves/ protective clothing / eye protection/ face protection.
	P264	Wash exposed area with plenty of water and soap thoroughly after handling.
RESPONSE:	P301 + P330 + P312	IF SWALLOWED: Rinse mouth. Call a POISON CENTER or physician if you feel unwell.
	P331	Do not induce vomiting.
	P303 + P361 + P353	IF ON SKIN (or hair): Remove/Take off immediately all contaminated clothing. Rinse skin with water/shower.
	P363	Wash contaminated clothing before reuse.
	P304 + P340 + P310	IF INHALED: Remove victim to fresh air and keep at rest in a position comfortable for breathing. Immediately call a POISON CENTER or doctor/ physician
	P305+ P351+ P338	IF IN EYES: Rinse cautiously with water for several minutes. Remove contact lenses, if present and easy to do. Continue rinsing.
	P310	Immediately call a POISON CENTER or doctor/ physician.
	P308+ P313	IF exposed or concerned: Get medical advice/attention.
STORAGE:	P403 + P235 + P405	Store in a well-ventilated place. Keep cool. Store Locked Up
DISPOSAL:	P501	Dispose of contents/container to hazardous or special waste collection point in accordance with local/regional/national/international regulations

SECTION 3 – COMPOSITION / INFORMATION ON INGREDIENTS

Components	CAS #	EC #	Concentration, %
Vinyl based polymers	9002-89-5	Not available	1-5
Portland Cement	65997-15-1	Not available	20 – 60
Pozzolonic additives (silicon based)	14808-60-7	238-878-4	10 – 40
Calcium Sulfate	13397-24-5	603-783-2	1 – 5
Calcium Carbonate	1317-65-3	215-279-6	1 – 5
Trace Elements:	Some of Stone Edge Surfaces Pro Wall Mix is made from materials mined from the earth and is processed using energy provided by fuels. Trace amounts of naturally occurring, potentially harmful chemical might be detected during chemical analysis. For example, Portland cement may contain up to 1.50 % insoluble residue, some of which may be free crystalline silica. Other trace constituents may include calcium oxide, free magnesium oxide, potassium and sodium sulfate compounds, and trace metal compounds.		

SECTION 4 – FIRST AID MEASURES

EMERGENCY INFORMATION: **Stone Edge Surfaces Pro Wall Mix** is a gray or white cementitious mixture of cement, sand, silica, and Hydrated Magnesium-Aluminum-Iron-Silicate. When in contact with moisture in eyes or on skin, or when mixed with water, it becomes highly caustic (pH>12) and will damage or burn (as severely as third degree) the eyes or skin. Inhalation may cause irritation to the moist mucous membranes of the nose, throat and upper respiratory system or may cause or may aggravate certain lung diseases or conditions. Use exposure controls or personal protection methods described in Section 8.	**EYES:** Immediately flush eye thoroughly with water. Continue flushing eye for at least 15 minutes, including under lids, to remove all particles. Call physician immediately. **SKIN:** Wash skin with cool water and pH-neutral soap or a mild detergent. Seek medical treatment if irritation or inflammation develops or persists. Seek immediate medical treatment in the event of burns. **INHALATION:** Remove person to fresh air. If breathing is difficult, administer oxygen. If not breathing, give artificial respiration. Seek medical help if coughing and other symptoms do not subside. Inhalation of large amounts of product require immediate medical attention. **INGESTION:** Do not induce vomiting. If conscious, have victim drink plenty of water and call a physician immediately.

SECTION 5 – FIREFIGHTING MEASURES

SUITABLE EXTINGUISHING MEDIA:	Use an extinguishing agent suitable for the surrounding fire.
UNSUITABLE EXTINGUISHING MEDIA:	Do not use water jet and halogenated compounds
SPECIFIC HAZARDS ARISING FROM THE CHEMICAL:	This product is non-flammable and non-combustible. Containers at risk from fire should be cooled with water spray and, if possible, removed from the danger area.
HAZARDUS COMBUSTION PRODUCTS:	None.
SPECIAL PROTECTIVE EQUIPMENT AND PRECAUTIONS FOR FIRE-FIGHTERS:	Firefighters should wear full protective gear.

SECTION 6 – ACCIDENTAL RELEASE MEASURES

EMERGENCY PROCEDURES:	Keep unnecessary and unprotected personnel from entering spill area. Do not touch or walk through spilled material.
PROTECTIVE EQUIPMENT:	Use exposure control and personal protection methods as described in Section 8. Ensure adequate ventilation/exhaust extraction. Avoid inhalation of dust and contact with skin and eyes during clean up.
PROPER METHODS OF CONTAINMENT:	Collect dry material using a scoop. Avoid actions that cause dust to become airborne. Do not dry sweep. Avoid inhalation of dust and contact with skin. Vacuum dust with equipment fitted with HEPA filter and place in a designated labeled waste container. If material is wet, scrape up wet material and place in an appropriate container. Allow the material to dry before disposal. For major spills: approach from upwind. Prevent wind dispersal.
CLEANUP:	Seal the container(s), remove from spill area and properly dispose of the waste material in accordance with existing federal, state and local regulations.
ENVIRONMENTAL PRECAUTIONS:	Prevent from entering into soil, ditches, sewers, waterways and/or groundwater, basements or confined areas. Large spills in waterways may be hazardous due to alkalinity of the certain components of the product. Inform the relevant authorities if the product has accessed waterways or other natural areas. See Section 12 for more details.

SECTION 7 – HANDLING AND STORAGE

PRECAUTIONS FOR SAFE HANDLING:	Do not breathe dust. Use adequate ventilation and/or dust collection methods. Use all available work practices to control dust exposures, such as water sprays. Do not permit dust to collect on walls, floors, sills, ledges, machinery, or equipment. Avoid breakage of bagged material or spills of bulk material. Wear appropriate respiratory, eye and skin protection. Avoid contact with skin and eyes. Wash hands thoroughly after handling. Eating, drinking and smoking should be prohibited in areas where this material is handled, stored and processed. Hands and/or face should be washed before eating, drinking and smoking and at the end of the shift. Remove contaminated clothing and protective equipment before entering eating areas. Wash or vacuum clothing when becomes dusty. Persons with a history of skin sensitization problems should not be employed in any process in which this product is used. Avoid exposure by obtaining and following special instructions before use. Do not handle until all safety precautions have been read and understood.
PRECAUTIONS FOR STORAGE:	Store in original or approved alternative container protected from direct sunlight in a dry, cool and well-ventilated area away from incompatible materials (see below for details) and food and drink. Keep container tightly closed and sealed until ready for use. Containers that have been opened must be carefully resealed. Store bags to avoid accidental tearing, breaking, or bursting. Avoid windblown dust by shielding or covering outdoor stockpiles. Protect from getting wet from atmospheric moisture and other sources.
INCOMPATIBILITIES:	- **Silica** reacts violently with powerful oxidizing agents such as hydrofluoric acid, fluorine, boron trifluoride, chlorine trifluoride, manganese trifluoride, oxygen difluoride, hydrogen peroxide, acetylene, ammonia yielding possible fire and/or explosions. Silicates dissolve readily in hydrofluoric acid producing a corrosive gas silicon tetrafluoride. - **Portland Cement** is highly alkaline and will react with acids to produce a violent, heat-generating reaction. Released toxic gases or vapors will depend on the acid involved. Aluminum powder and other alkali and alkaline earth elements will react in wet mortar or concrete, liberating hydrogen gas. Reacts slowly with water forming hydrated compounds, releasing heat and producing a strong alkaline solution until reaction is substantially complete. - **Calcium Sulfate :** Reacts with Aluminum (at high temperatures), diazomethane. - **Calcium Carbonate :** ignites on contact with fluorine and is incompatible with acids, alum, ammonium salts, and magnesium

SECTION 8 – PRECAUTIONS TO CONTROL EXPOSURE / PERSONAL PROTECTION

OSHA's PERMISSABLE EXPOSURE LIMITS (PEL)

COMPONENTS	CAS #	OSHA PEL mg/m³[(e)]	Cal/OSHA PEL 8-hour TWA, mg/m³	NIOSH REL Up to 10-hour TWA, mg/m³	ACGIH 2017 TLV 8hrs TWA, mg/m³
Vinyl based polymers	9002-89-5	n/a	n/a	n/a	n/a
Portland Cement:	65997-15-1	(Total Dust) 10 (Respirable fraction) 5	(Total Dust) 10 mg/m³ (Respirable fraction) 5 mg/m³	(Total Dust) 10 mg/m³ (Respirable fraction) 5 mg/m³	1 mg/m³ (no asbestos & < 1% crystalline silica)
Calcium Sulfate		(Total Dust) 15 (Respirable fraction) 5	(Total Dust) 10 mg/m³ (Respirable fraction) 5	(Total Dust) 10 mg/m³ (Respirable fraction) 5	No Data
Calcium Carbonate	1317-65-3	15	10 mg/m³	10 mg/m³	No Data
Pozzolonic additives (silicon based)	14808-60-7	No Data	.05 mg/m³	.05 mg/m³	.025 mg/m³

ENGINEERING CONTROLS:	Avoid actions that cause dust to become airborne. Use local exhaust or general dilution ventilation to control exposure within applicable limits.

PERSONAL PROTECTIVE EQUIPMENT (PPE).

RESPIRATORY PROTECTION:	Use local exhaust or general dilution ventilation to control dust levels below applicable exposure limits. Minimize dispersal of dust into air. If local or general ventilation is not adequate to control dust levels below applicable exposure limits or when dust causes irritation or discomfort, use MSHA/NIOSH approved respirators.
EYE PROTECTION:	Wear safety glasses with side shields or goggles to avoid contact with eyes. In extreme dusty environments and unpredictable environments, wear tight fitting unvented or indirectly vented goggles to avoid eye irritation or injury. Contact lenses should not be worn when handling cement or cement containing products.
SKIN PROTECTION:	Wear impervious abrasion and alkali-resistant gloves, boots, long sleeve shirt, long pants or other protective clothing to prevent skin contact. Promptly remove clothing dusty with Wall Mix or clothing dampened with moisture mixed with Wall mix, and launder before re-use. If contact occurs, wash areas contacted by material with pH neutral soap and water.

SECTION 9 – PHYSICAL AND CHEMICAL PROPERTIES

VISCOSITY	Not Applicable		**APPERANCE:**	Gray or White fine powder
ODOR & ODOR THRESHOLD:	Odorless		**FLASH POINT:**	Not Applicable, Not Flammable, Not Combustible
BOILING POINT:	>1000°C		**MELTING POINT:**	>1000°C
EVAPORATION RATE:	Not Applicable		**FLAMMABILITY (SOLID/GAS)**	Not Applicable
VAPOR PRESSURE:	Not applicable		**pH (IN WATER): (ASTM D 1293-95)**	12-13
VAPOR DENSITY:	Not applicable		**SOLUBILITY IN WATER:**	Slightly (0.1%-1.0%)
RELATIVE DENSITY	Not Applicable		**UPPER/LOWER FLAMMABILITY**	Not Flammable, Not Explosive
PARTITION COEFFICIENT: n-octano/wtr.	Not Applicable		**AUTO IGNITION TEMPERATURE**	Not Flammable

SECTION 10 – STABILITY AND REACTIVITY

CHEMICAL STABILITY:	Product is stable under recommended storage conditions. Keep dry until used.
CHEMICAL REACTIVITY:	Hazardous Polymerization: Will not occur. Corrosion to Metals: Has corrosive effects to metal. Oxidizing Properties: Not classified as oxidizing.
CONDITIONS TO AVOID:	Unintentional contact with water or high humidity. Contact with water will result in hydration and produces (caustic) calcium hydroxide and heat. Avoid generation of dust.
INCOMPATIBILITY:	- **Silica** reacts violently with powerful oxidizing agents such as hydrofluoric acid, fluorine, boron trifluoride, chlorine trifluoride, manganese trifluoride, oxygen difluoride, hydrogen peroxide, acetylene, ammonia yielding possible fire and/or explosions. Silicates dissolve readily in hydrofluoric acid producing a corrosive gas silicon tetrafluoride. - **Portland Cement** is highly alkaline and will react with acids to produce a violent, heat-generating reaction. Released toxic gases or vapors will depend on the acid involved. Aluminum powder and other alkali and alkaline earth elements will react in wet mortar or concrete, liberating hydrogen gas. Reacts slowly with water forming hydrated compounds, releasing heat and producing a strong alkaline solution until reaction is substantially complete. - **Calcium Sulfate :** Reactive with oxidizing agents,acids. Incompatible with aluminum and diazomethane. - **Calcium Carbonate :** ignites on contact with fluorine and is incompatible with acids, alum, ammonium salts, and magnesium
HAZARDOUS DECOMPOSITION:	Will not spontaneously occur. Adding water results in hydration and produces (caustic) calcium hydroxide. Under normal conditions of storage and use, hazardous decomposition products should not be produced. In fire conditions, depending on temperature, air supply and presence of other materials, decomposition products can include, but are not limited to carbon dioxide, carbon monoxide, silica oxides, sulfur oxides, metal oxides.

SECTION 11 – TOXOCOLOGY INFORMATION

LIKELY ROUTES OF EXPOSURE:	Skin and Eye Contact, Inhalation and Ingestion.

SYMPTOMS OF EXPOSURE:

ACUTE TOXICITY	**INGESTION:**	Harmful if swallowed. Adverse symptoms may include burns to mouth, throat and stomach, abdominal pain, nausea and diarrhea. Although inadvertent ingestion of small quantities of wet concrete or its dry ingredients are not known to be harmful, ingestion of larger quantities can be harmful and requires immediate medical attention
	INHALATION:	May cause respiratory tract irritation and coughing. Some ingredients may contain trace amounts of crystalline silica. Exposure to these ingredients in excess of the applicable TLV or PEL (see Section 2) may cause or aggravate other lung conditions. Exposure to Portland cement may cause irritation to the moist mucous membranes of the nose, throat, and upper respiratory system. It may also leave unpleasant deposits in the nose. May cause allergy or asthma symptoms or breathing difficulties if inhaled.
	SKIN CORROSION SKIN IRRITATION	Exposure during the handling or mixing of the dry ingredients may cause drying of the skin with consequent mild irritation or more significant effects attributable to aggravation of other conditions. Exposure to wet concrete may cause more severe skin effects including thickening, cracking or fissuring of the skin. Prolonged exposure can cause severe skin damage in the form of (caustic) chemical burns. May cause skin burns. A more severe response may be expected if skin is abraded (scratched or cut). The response may appear in a variety of forms ranging from a mild rash to severe skin ulcers. Persons already sensitized may react to their first contact with the product. Other persons may first experience this effect after years of contact.
	SERIOUS EYE DAMAGE & IRRITATION	Wet or Dry product may cause serious eye damage. Adverse symptoms may include tearing, redness, pain and in the worst case blindness. Dust may cause abrasion of the cornea. wet concrete may cause effects ranging from moderate eye irritation to chemical burns and blindness
	SPECIFIC TARGET ORGAN GENERAL TOXICITY: SINGLE EXPOSURE:	This product contains components that may cause respiratory tract irritation after single exposure.
	SPECIFIC TARGET ORGAN GENERAL TOXICITY: REPEAT EXPOSURE	This product contains components that may cause respiratory tract irritation (asthma, bronchitis, emphysema, and chronic obstructive pulmonary disease), lung disease or lung cancer, kidney disease, tuberculosis, silicosis, autoimmune and kidney diseases after prolonged and repeat exposure to airborne free respirable crystalline silica if product is handled without adequate protection.
	ASPIRATION HAZARD:	Not an aspiration hazard.

CHRONIC TOXICITY	**Respiratory and Skin Sensitizer:**	This product contains trace amounts of chemical (impurity) that is reported to be a skin sensitizer: present in Portland Cement at level <0.1%		
	Generative Cell Mutagenicity	Risk to humans is not expected from exposure to this product		
	Carcinogenicity:	**This product contains components reported to be carcinogenic to humans. Group 1).**	Pozzolonic additives (silicon based) CAS #: 14808-60-7:	IARC: Group 1 (Carcinogenic to humans) NTP: Known to be a Human Carcinogen (Respirable size) ACGIH: Group A2 (Suspected Human Carcinogen) NIOSH: Potential occupational carcinogen
			Portland Cement CAS # 65997-15-1	ACGIH: A4 - Not Classifiable as a Human Carcinogen

Reproductive Toxicity:	Risk to humans is not expected from exposure to this product. However, this product contains trace amounts of chemical (impurities) that are reported to cause developmental issues. Chromium (VI) Compounds, CAS #: 18540-29-9 and Methyl alcohol, CAS #: 67-56-1

General Product Warning:	May cause cancer. Prolonged and repeated exposure to airborne free respirable crystalline silica can result in lung disease and/or lung cancer. IARC states that crystalline silica in the form of quartz or cristobalite from occupational sources is carcinogenic to humans (Group 1).

SECTIONS 12 – ECOLOGICAL INFORMATION

ECOTOXICITY	Not classified as environmentally hazardous. However, this does not exclude the possibility that large or frequent spills can have a harmful or damaging effect on the environment.
PERSISTENCE AND DEGRADABILITY:	No information available for the product, believed to be not readily biodegradable by OECD criteria.
BIOACCUMULATIVE POTENTIAL:	No information is available for the product, but it is believed that no significant accumulation in organisms is expected
MOBILITY IN SOIL:	No information is available for the product, but it is believed that mobility in soil is not expected
OTHER ADVERSE EFFECTS:	No information is available for the product

ECOTOXICITY TEST RESULTS: No information is available for this product mixture. Results for components, where available:

Pozzolonic additives (silicon based)CAS #: 14808-60-7	Not known to be ecotoxic; no data suggests that is toxic to birds, fish, invertebrates, microorganisms or plants.
Calcium Sulfate CAS #:13397-24-5	Not classified as environmentally hazardous; However, this does not exclude harmful or damaging effect on the environment in the case of large or frequent spills. Fish: LC50 (Fathead minnow), 96hrs: >1970 mg/L. Biodegradability: Not applicable for the salt of inorganic compounds. Bioaccumulation: not expected. Mobility in Soil: a low potential for adsorption to soil; however, it dissolves in presence of water.
Calcium Carbonate CAS #: 1317-65-3	Acute toxicity Fish LC50 (Rainbow Trout), 96hrs: >10,000 mg/L Aquatic invertebrates EC50 (Daphnia magna), 48hrs: >1,000 mg/L Aquatic plants EC50 (Algae), 72hrs: >200 mg/L In solid state, this mineral is a major part of the rocks of earth's surface and is not biodegradable. Negative effect on environment should be therefore excluded. It is dissolved in a natural state and indispensable part of natural waters. Concentrated suspensions of minerals in natural waters may have an unfavorable effect on water organisms.

SECTION 13 – DISPOSAL CONSIDERATIONS

PRODUCT DISPOSAL:	The generation of waste should be avoided or minimized wherever possible. If product becomes a waste, it does not meet criteria of hazardous waste as defined in 40 CFR 261, Subpart C and D. Do not discharge or dump material into sewer system, the ground or bodies of water. Spill cleanup residues may still be subject to RCRA storage and disposal requirements. Dispose waste in compliance with local, state and federal regulations via licensed waste disposal contractor. See Section 7 for Handling Procedures. See Section 8 for Personal Protective Equipment recommendations
CONTAINER DISPOSAL:	Even after emptying, container may retain residues. Containers should be completely emptied and safely stored until appropriately reconditioned or dispose of (contents/container) in accordance with local/regional/national/international regulations.

SECTION 14 – TRANSPORTATION CONSIDERATIONS

Land transport, U.S. DOT:	Non-Regulated
Sea transport, IMDG	Non-Regulated
Air transport, IATA/ICAO:	Non-Regulated

SECTION 15 – REGULATORY INFORMATION (Non-Mandatory Section as per OSHA: Not a Complete List)

U.S. REGULATIONS

OSHA HCS:	This product is a "Hazardous Chemical" as defined by the OSHA Hazard Communication Standard, 29CFR 1910.1200.
TSCA REGULATIONS:	All components of this product are listed or are exempt from TSCA Inventory requirements under 40 CFR 720.30
EPCRA Section 302 (40 CFR Part 355)	(Emergency Response Planning, Extremely Hazardous Substance): No components are subject to the reporting.
EPCRA Section 304 (40 CFR Part 355	(Emergency Release Notification Requirements): No components are subject to the reporting.
EPCRA Sections 311 & 312	(Hazardous Chemical Inventory Reporting, Hazard Categories): Acute Health Hazard, Chronic Health Hazard
EPCRA Section 313 40 CFR Part 372)	(Toxic Chemical Release Inventory Reporting): No components or impurities of this product are present above De Minimis level and therefore do not require reporting.
CERCLA Sections 102-103 (40 CFR Part 302)	(Hazardous Substances Release Notification): No components are subject to the reporting. Some of the components contain trace amounts of the following chemicals that require reporting if a criterion of reportable quantity is fulfilled: Fine Mineral Fibers of average diameter ≤1µm (including Crystalline Silica, CAS #: 14808-60-7 with diameter ≤1µm)
CLEAN AIR ACT	Ozone Depleting Substances (ODS): This product does not contain and is not manufactured with ozone depleting substances. Hazardous Air Pollutants, OSHA, Section 112(b), Table Z-1 and Table Z-3:

COMPONENT ANALYSIS - STATE

STATE	INFORMATION
CA	The following statement(s) are provided under the California Safe Drinking Water and Toxic Enforcement Act of 1986 (Proposition 65): **WARNING!** This product contains chemicals known to the state of California to cause cancer, birth defects, or other reproductive harm.

SECTION 16 – OTHER INFORMATION

HAZARDOUS MATERIAL INFORMATION SYSTEM (HMIS)
NFPA/HMIS Definitions: 0-Least, 1-Slight, 2-Moderate, 3-High, 4-Extreme
E-Protective Equipment: Safety glasses, gloves, Dust Respirator

Health	1
Flammability	0
Reactivity	0
Personal Protection	E

OTHER INFORMATION:
SELLER MAKES NO WARRANTY, EXPRESS OR IMPLIED, CONCERNING THE PRODUCT OR THE MERCHANTABILITY OR FITNESS THEREOF FOR ANY PURPOSE OR CONCERNING THE ACCURACY OF ANY INFORMATION PROVIDED BY TURLET INTERNATIONAL RSOURCES, LLC., except that the product shall conform to contracted specifications. The information provided herein was believed by TURLEY INTERNATIONAL RESOURCES, LLC. to be accurate at the time of preparation or prepared from sources believed to be reliable, but it is the responsibility of the user to investigate and understand other pertinent sources of information to comply with all laws and procedures applicable to the safe handling and use of the product and to determine the suitability of the product for its intended use. Buyer's exclusive remedy shall be for damages and no claim of any kind, whether as to product delivered or for non-delivery of product, failure of product due to manufacturers defect, and whether based on contract, breach of warranty, negligence, or otherwise shall be greater in amount than the purchase price of the quantity of product in respect of which damages are claimed. In no event shall Seller be liable for incidental or consequential damages or labor of any kind, whether Buyer's claim is based on contract, breach of warranty, negligence, manufacturers defect, product failure, or otherwise.

Rest of Sheet Purposely Left Blank

END OF SHEET

Safety Data Sheet
RainBuster 415, 420

844-786-6333
info@stoneedgesurfaces.com

Issue Date: 07-Apr-2016 **Revision Date:** 27-Sept.-2016 **Version** 1

1. IDENTIFICATION

Product Identifiers

RainBuster #415
Self-Adhered Flashing Membrane

RainBuster #420
Nail On Flashing Membrane

Recommended use of the chemical and restrictions on use

Recommended Use Self-adhering and nail on membranes used for waterproofing barrier/sealing systems.

Details of the supplier of the safety data sheet

Supplier Address
Top Industrial, Inc.
15010 Keswick St.
Van Nuys, CA 91405
Phone: 800-473-1617

Emergency Telephone Number

Emergency Telephone (24 hr) Chemtrec: 800-424-9300

2. HAZARDS IDENTIFICATION

As defined in the OSHA Hazard Communication Standard, 29 CFR 1910.1200, the products listed below are considered articles and do not require an SDS. In addition, articles are not included in the scope of the Globally Harmonization System (GHS). As such, the GHS labeling elements are not included on this SDS. All components listed for this product are bound within the product. When handled as intended and under normal conditions of use, there is no evidence that any of the ingredients are released in amounts that pose a significant health risk. Although these products are not subject to the OSHA Standard or GHS labeling elements, Top Industrial, Inc. would like to disclose as much health and safety information as possible to ensure that this product is handled and used properly. This SDS contains valuable information critical to the safe handling and proper use of the product. This SDS should be retained and be made available for employees and other users of this product. In addition, the recommendations for handling and use of these products should be included in worker training programs.

Appearance Black pliable solid, rubber **Physical State** Solid **Odor** Light Petroleum

Classification

Hazards Not Otherwise Classified (HNOC)
Skin sensitive by some individuals.

Signal Word
Warning

Hazard Statements
Harmful if ingested.
Under extreme and non-normal circumstances such as extensive cutting, grinding and pulverizing, there is some potential exposure to respirable crystalline silica (quartz). Prolonged and frequent exposure to such conditions could in some instances cause silicosis, a fibrosis of the lungs.

Precautionary Statements - Prevention
Do not handle until all safety precautions have been read and understood
Use personal protective equipment as required
Wash face, hands and any exposed skin thoroughly after handling
Do not eat, drink or smoke when using this product

Precautionary Statements - Response
If expose concerns exist,
get medical advice/attention
If ingested, call a POISON CENTER or doctor/medical professional

Precautionary Statements - Storage
No special precautions are warranted.

Precautionary Statements - Disposal
See Section 13.

3. COMPOSITION/INFORMATION ON INGREDIENTS

Synonyms RainBuster #415, RainBuster #420

Chemical Name	CAS No	Weight-%
Petroleum Asphalt	8052-42-4	60-70
Calcium Carbonate/Crystalline Silica	14808-60-7	10-25
1,3-butadiene-styrene block polymer	9003-55-8	0-10
Petroleum Distillate	64742-65-0	<5

*Because of product form, exposure to dust or fumes is not expected to occur with normal use.

4. FIRST-AID MEASURES

First Aid Measures

General Advice	If exposed or concerned: Get medical advice/attention.
Eye Contact	Rinse thoroughly with plenty of water for at least 15 minutes, lifting lower and upper eyelids. Consult a physician.
Skin Contact	Wash with soap and water.
Inhalation	Remove to fresh air.
Ingestion	If ingested: Call a POISON CENTER or doctor/physician if you feel unwell. Rinse mouth.

Most important symptoms and effects

Symptoms	Some individuals find it to be harmful in contact with skin. This may cause a skin irritation or redness. It may aggravate pre-existing skin conditions.

Indication of any immediate medical attention and special treatment needed

Notes to Physician	Treat symptomatically.

5. FIRE-FIGHTING MEASURES

Suitable Extinguishing Media Carbon dioxide (CO_2)

Unsuitable Extinguishing Media Not determined.

Specific Hazards Arising from the Chemical Product is not flammable.

Hazardous Combustion Products Carbon monoxide. Sulfur oxides. Various hydrocarbons.

Protective equipment and precautions for firefighters As in any fire, wear self-contained breathing apparatus pressure demand, MSHA/NIOSH (approved or equivalent) and full protective gear.

6. ACCIDENTAL RELEASE MEASURES

Personal precautions, protective equipment and emergency procedures

Personal Precautions	Use personal protective equipment as required.
Environmental Precautions	Avoid release to the environment. See Section 13: DISPOSAL CONSIDERATIONS. See Section 12 for additional Ecological Information.

Methods and material for containment and cleaning up

Methods for Containment Prevent further leakage or spillage if safe to do so.

Methods for Clean-Up Clean up in accordance with all applicable regulations. Sweep up, pick up and put into an approved waste container for disposal.

7. HANDLING AND STORAGE

Precautions for safe handling

Advice on Safe Handling Handle in accordance with good industrial hygiene and safety practice. Avoid prolonged contact with skin, eyes or clothing. Use personal protective equipment as required. . Do not handle until all safety precautions have been read and understood. Wash face, hands, and any exposed skin thoroughly after handling. Do not eat, drink or smoke when using this product.

Conditions for safe storage, including any incompatibilities

Storage Conditions Keep container tightly closed and store in a cool, dry and well-ventilated place. Store In a secure location.

Incompatible Materials None known based on information supplied.

8. EXPOSURE CONTROLS/PERSONAL PROTECTION

Exposure Guidelines

Exposures at these levels are not expected to occur under normal use. These exposure guidelines are provided as a general method for safe workplace monitoring.

Chemical Name	ACGIH TLV	OSHA PEL	NIOSH IDLH
Petroleum Asphalt 8052-42-4	TWA: 0.5 mg/m^3 benzene soluble aerosol fume, inhalable fraction	-	Ceiling: 5 mg/m^3 fume 15 min
Calcium Carbonate/Crystalline Silica 14808-60-7	TWA: 0.025 mg/m^3 respirable fraction	(vacated) TWA: 0.1 mg/m^3 respirable dust : (30)/(%SiO2 + 2) mg/m^3 TWA total dust : (250)/(%SiO2 + 5) mppcf TWA respirable fraction : (10)/(%SiO2 + 2) mg/m^3 TWA respirable fraction	IDLH: 50 mg/m^3 respirable dust TWA: 0.05 mg/m^3 respirable dust

Other Information *Because of product form, exposure to dust or fumes is not expected to occur in normal use.

Appropriate engineering controls

Engineering Controls Apply technical measures to comply with the occupational exposure limits. Eyewash stations. Safety Showers.

Individual protection measures, such as personal protective equipment

Eye/Face Protection Use approved eye protection to avoid eye contact. Refer to 29 CFR 1910.133 for eye and face protection regulations.

Skin and Body Protection	Wear normal working gloves of 100% cotton or leather. Refer to 29 CFR 1910.138 for appropriate skin and body protection.
Respiratory Protection	Ensure adequate ventilation, especially in confined areas. In case of inadequate ventilation wear respiratory protection. Refer to 29 CFR 1910.134 for respiratory protection requirements.
General Hygiene Considerations	Handle in accordance with good industrial hygiene and safety practice.

9. PHYSICAL AND CHEMICAL PROPERTIES

Information on basic physical and chemical properties

Physical State	Solid		
Appearance	Black pliable solid, rubber	**Odor**	Light Petroleum
Color	Black	**Odor Threshold**	Not determined

Property	**Values**	**Remarks • Method**
pH	Not applicable	
Melting Point/Freezing Point	Not determined	
Flash Point	Not determined	
Evaporation Rate	Not applicable	
Flammability (Solid, Gas)	Not determined	
Upper Flammability Limits	Not determined	
Lower Flammability Limit	Not determined	
Vapor Pressure	Not applicable	
Vapor Density	Not applicable	
Specific Gravity	Not determined	
Water Solubility	Insoluble in water	
Solubility in other solvents	Not determined	
Partition Coefficient	Not determined	
Auto-ignition Temperature	Not determined	
Decomposition Temperature	Not determined	
Kinematic Viscosity	Not applicable	
Dynamic Viscosity	Not applicable	

Explosive Properties	Not an explosive
Oxidizing Properties	Not applicable
VOC Content	0.0 g/l

10. STABILITY AND REACTIVITY

Reactivity	Not reactive under normal conditions.
Chemical Stability	Stable under recommended storage conditions.
Possibility of Hazardous Reactions	None under normal processing.
Hazardous Polymerization	Hazardous polymerization does not occur.
Conditions to Avoid	Temperatures over 400°F may cause resin degradation. Keep out of reach of children. See Sec. 7 Handling & Storage.
Incompatible Materials	None known based on information supplied.
Hazardous Decomposition Products	Carbon monoxide. Various hydrocarbons. Sulfur oxides.

11. TOXICOLOGICAL INFORMATION

Information on likely routes of exposure

Product Information

Eye Contact	Avoid contact with eyes.
Skin Contact	May be harmful in prolonged contact with skin in some individuals.
Inhalation	Not an expected route of exposure.
Ingestion	Harmful if ingested

Component Information

Chemical Name	Oral LD50	Dermal LD50	Inhalation LC50
Petroleum Asphalt 8052-42-4	> 5000 mg/kg (Rat)	> 2000 mg/kg (Rabbit)	-
Calcium Carbonate/Crystalline Silica 14808-60-7	= 500 mg/kg (Rat)	-	-

*Because of product form, exposure to dust or fumes is not expected to occur in normal use.

Information on physical, chemical and toxicological effects

Symptoms Please see section 4 of this SDS for symptoms.

Numerical measures of toxicity Not determined

12. ECOLOGICAL INFORMATION

Ecotoxicity The product is not classified as environmentally hazardous.

Component Information

13. DISPOSAL CONSIDERATIONS

Waste Treatment Methods

Disposal of Wastes Disposal should be in accordance with applicable regional, national and local laws and regulations. This product is not regulated as a hazardous waste by the U.S. EPA under the Resource Conservation and Recovery Act (RCRA).

14. TRANSPORT INFORMATION

Note Please see current shipping paper for most up to date shipping information, including exemptions and special circumstances.

DOT Not regulated

IATA Not regulated

IMDG Not regulated

15. REGULATORY INFORMATION

International Inventories

Chemical Name	TSCA	DSL	NDSL	EINECS	ELINCS	ENCS	IECSC	KECL	PICCS	AICS
Petroleum Asphalt	Present	X		Present		Present	X	Present	X	X
Calcium Carbonate/Crystalline Silica	Present	X		Present		Present	X	Present	X	X
1,3-butadiene-styrene block polymer	Present	X				Present	X	Present	X	X

Legend:

TSCA *- United States Toxic Substances Control Act Section 8(b) Inventory*

DSL/NDSL *- Canadian Domestic Substances List/Non-Domestic Substances List*

EINECS/ELINCS *- European Inventory of Existing Chemical Substances/European List of Notified Chemical Substances*

ENCS *- Japan Existing and New Chemical Substances*

IECSC *- China Inventory of Existing Chemical Substances*

KECL *- Korean Existing and Evaluated Chemical Substances*

PICCS *- Philippines Inventory of Chemicals and Chemical Substances*

AICS - Australian Inventory of Chemical Substances

US Federal Regulations

SARA 313 Not applicable

16. OTHER INFORMATION

NFPA	**Health Hazards** 1	**Flammability** 1	**Instability** 0
HMIS	**Health Hazards** Not determined	**Flammability** Not determined	**Physical Hazards** Not determined

Issue Date:	07-Apr-2016
Revision Date:	07-Apr-2016 27-Sept.-2016
Revision Note:	New format Removed US State Regulations

Disclaimer

The information provided in this Safety Data Sheet is correct to the best of our knowledge, information and belief at the date of its publication. The information given is designed only as a guidance for safe handling, use, processing, storage, transportation, disposal and release and is not to be considered a warranty or quality specification. The information relates only to the specific material designated and may not be valid for such material used in combination with any other materials or in any process, unless specified in the text.

End of Safety Data Sheet

SAFETY DATA SHEET
Smooth Coat

Date Revised: OCT 2020
Supersedes: MSDS JUN 2002

SECTION 1 – PRODUCT AND COMPANY IDENTIFICATION

PRODUCT NAME: Stone Edge Surfaces Smooth Coat	**MANUFACTURER:** Turley International Resources, LLC.
PRODUCT USE: Dry Cementitious Decorative Concrete Overlay Mix	4322 South 80th Street
SUPPLIER: N/A	Mesa, AZ 85212 - USA
	TEL: 844-786-6333 E: info@stoneedgesurfaces.com
EMERGENCY: Contact Local Hospital or call 911 in US	

SECTION 2 – HAZARDS IDENTIFICATION

CLASSIFICATION OF THE SUBSTANCE MIXTURE:

HAZARD CLASS	CATEGORY	HAZARD STATEMENTS
Acute Toxicity, Oral	4	Harmful if swallowed
Acute Toxicity, Dermal	5	May be harmful in contact with skin
Skin corrosion / irritation	1	Causes severe skin burns and eye damage
Serious eye damage / Eye irritation	1	Causes serious eye damage
Carcinogenicity	1A	May cause cancer by inhalation
Specific target organ toxicity, single exposure	3	May cause respiratory irritation
Specific target organ toxicity, repeated exposure	1	Causes damage to lungs and respiratory system, through prolonged or repeated exposure by inhalation. Causes damage to kidney and liver through prolonged or repeated exposure.

OSHA HAZARD COMMUNICATION STANDARD:	This product is a "Hazardous Chemical" as defined by the OSHA Hazard Communication Standard, 29 CFR 1910.1200.

GHS LABEL ELEMENTS:	**SIGNAL WORD:** DANGER	**PICTOGRAM(S):**

PRECAUTIONARY STATEMENTS:

HEADING	OSHA Ref. #	Instructions
PREVENTION:	P201	Obtain special instruction before use.
	P202	Do not handle until all safety precautions have been read and understood.
	P281	Use personal protective equipment as required.
	P271	Use only outdoors or in a well-ventilated area.
	P260	Do not breathe dusts or mists.
	P270	Do not eat, drink, and smoke when using this product.
	P280	Wear protective gloves/ protective clothing / eye protection/ face protection.
	P264	Wash exposed area with plenty of water and soap thoroughly after handling.
RESPONSE:	P301 + P330 + P312	IF SWALLOWED: Rinse mouth. Call a POISON CENTER or physician if you feel unwell.
	P331	Do not induce vomiting.
	P303 + P361 + P353	IF ON SKIN (or hair): Remove/Take off immediately all contaminated clothing. Rinse skin with water/shower.
	P363	Wash contaminated clothing before reuse.
	P304 + P340 + P310	IF INHALED: Remove victim to fresh air and keep at rest in a position comfortable for breathing. Immediately call a POISON CENTER or doctor/ physician
	P305+ P351+ P338	IF IN EYES: Rinse cautiously with water for several minutes. Remove contact lenses, if present and easy to do. Continue rinsing.
	P310	Immediately call a POISON CENTER or doctor/ physician.
	P308+ P313	IF exposed or concerned: Get medical advice/attention.
STORAGE:	P403 + P235 + P405	Store in a well-ventilated place. Keep cool. Store Locked Up
DISPOSAL:	P501	Dispose of contents/container to hazardous or special waste collection point in accordance with local/regional/national/international regulations

SECTION 3 – COMPOSITION / INFORMATION ON INGREDIENTS

Components	CAS #	EC #	Concentration, %
Amorphous Silica	7631-86-9	231-545-4	45 – 75
Portland Cement	65997-15-1	Not available	25 – 50
Crystalline Silica (Quartz)	14808-60-7	238-878-4	5 – 25
Calcium Sulfate Dihydrate (Gypsum)	13397-24-5	603-783-2	1 – 5
Calcium Carbonate (Limestone)	1317-65-3	215-279-6	1 – 5
Trace Elements:	Some of Stone Edge Surfaces Smooth Coat is made from materials mined from the earth and is processed using energy provided by fuels. Trace amounts of naturally occurring, potentially harmful chemical might be detected during chemical analysis. For example, Portland cement may contain up to 1.50 % insoluble residue, some of which may be free crystalline silica. Other trace constituents may include calcium oxide, free magnesium oxide, potassium and sodium sulfate compounds, and trace metal compounds.		

SECTION 4 – FIRST AID MEASURES

EMERGENCY INFORMATION: **Stone Edge Surfaces Smooth Coat** is a gray or white cementitious mixture of cement, sand, silica, and Hydrated Magnesium-Aluminum-Iron-Silicate. When in contact with moisture in eyes or on skin, or when mixed with water, it becomes highly caustic (pH>12) and will damage or burn (as severely as third degree) the eyes or skin. Inhalation may cause irritation to the moist mucous membranes of the nose, throat and upper respiratory system or may cause or may aggravate certain lung diseases or conditions. Use exposure controls or personal protection methods described in Section 8.	**EYES:** Immediately flush eye thoroughly with water. Continue flushing eye for at least 15 minutes, including under lids, to remove all particles. Call physician immediately. **SKIN:** Wash skin with cool water and pH-neutral soap or a mild detergent. Seek medical treatment if irritation or inflammation develops or persists. Seek immediate medical treatment in the event of burns. **INHALATION:** Remove person to fresh air. If breathing is difficult, administer oxygen. If not breathing, give artificial respiration. Seek medical help if coughing and other symptoms do not subside. Inhalation of large amounts of Spray Mix require immediate medical attention. **INGESTION:** Do not induce vomiting. If conscious, have victim drink plenty of water and call a physician immediately.

SECTION 5 – FIREFIGHTING MEASURES

SUITABLE EXTINGUISHING MEDIA:	Use an extinguishing agent suitable for the surrounding fire.
UNSUITABLE EXTINGUISHING MEDIA:	Do not use water jet and halogenated compounds
SPECIFIC HAZARDS ARISING FROM THE CHEMICAL:	This product is non-flammable and non-combustible. Containers at risk from fire should be cooled with water spray and, if possible, removed from the danger area.
HAZARDUS COMBUSTION PRODUCTS:	None.
SPECIAL PROTECTIVE EQUIPMENT AND PRECAUTIONS FOR FIRE-FIGHTERS:	Firefighters should wear full protective gear.

SECTION 6 – ACCIDENTAL RELEASE MEASURES

EMERGENCY PROCEDURES:	Keep unnecessary and unprotected personnel from entering spill area. Do not touch or walk through spilled material.
PROTECTIVE EQUIPMENT:	Use exposure control and personal protection methods as described in Section 8. Ensure adequate ventilation/exhaust extraction. Avoid inhalation of dust and contact with skin and eyes during clean up.
PROPER METHODS OF CONTAINMENT:	Collect dry material using a scoop. Avoid actions that cause dust to become airborne. Do not dry sweep. Avoid inhalation of dust and contact with skin. Vacuum dust with equipment fitted with HEPA filter and place in a designated labeled waste container. If material is wet, scrape up wet material and place in an appropriate container. Allow the material to dry before disposal. For major spills: approach from upwind. Prevent wind dispersal.
CLEANUP:	Seal the container(s), remove from spill area and properly dispose of the waste material in accordance with existing federal, state and local regulations.
ENVIRONMENTAL PRECAUTIONS:	Prevent from entering into soil, ditches, sewers, waterways and/or groundwater, basements or confined areas. Large spills in waterways may be hazardous due to alkalinity of the certain components of the product. Inform the relevant authorities if the product has accessed waterways or other natural areas. See Section 12 for more details.

SECTION 7 – HANDLING AND STORAGE

PRECAUTIONS FOR SAFE HANDLING:	Do not breathe dust. Use adequate ventilation and/or dust collection methods. Use all available work practices to control dust exposures, such as water sprays. Do not permit dust to collect on walls, floors, sills, ledges, machinery, or equipment. Avoid breakage of bagged material or spills of bulk material. Wear appropriate respiratory, eye and skin protection. Avoid contact with skin and eyes. Wash hands thoroughly after handling. Eating, drinking and smoking should be prohibited in areas where this material is handled, stored and processed. Hands and/or face should be washed before eating, drinking and smoking and at the end of the shift. Remove contaminated clothing and protective equipment before entering eating areas. Wash or vacuum clothing when becomes dusty. Persons with a history of skin sensitization problems should not be employed in any process in which this product is used. Avoid exposure by obtaining and following special instructions before use. Do not handle until all safety precautions have been read and understood.
PRECAUTIONS FOR STORAGE:	Store in original or approved alternative container protected from direct sunlight in a dry, cool and well-ventilated area away from incompatible materials (see below for details) and food and drink. Keep container tightly closed and sealed until ready for use. Containers that have been opened must be carefully resealed. Store bags to avoid accidental tearing, breaking, or bursting. Avoid windblown dust by shielding or covering outdoor stockpiles. Protect from getting wet from atmospheric moisture and other sources.
INCOMPATIBILITIES:	- **Silica** reacts violently with powerful oxidizing agents such as hydrofluoric acid, fluorine, boron trifluoride, chlorine trifluoride, manganese trifluoride, oxygen difluoride, hydrogen peroxide, acetylene, ammonia yielding possible fire and/or explosions. Silicates dissolve readily in hydrofluoric acid producing a corrosive gas silicon tetrafluoride. - **Portland Cement** is highly alkaline and will react with acids to produce a violent, heat-generating reaction. Released toxic gases or vapors will depend on the acid involved. Aluminum powder and other alkali and alkaline earth elements will react in wet mortar or concrete, liberating hydrogen gas. Reacts slowly with water forming hydrated compounds, releasing heat and producing a strong alkaline solution until reaction is substantially complete. - **Calcium Sulfate Dihydrate (Gypsum):** Reacts with Aluminum (at high temperatures), diazomethane. - **Calcium Carbonate (Limestone)** ignites on contact with fluorine and is incompatible with acids, alum, ammonium salts, and magnesium

SECTION 8 – PRECAUTIONS TO CONTROL EXPOSURE / PERSONAL PROTECTION

OSHA's PERMISSABLE EXPOSURE LIMITS (PEL)

COMPONENTS	CAS #	OSHA PEL mg/m³[(e)]	Cal/OSHA PEL 8-hour TWA, mg/m³	NIOSH REL Up to 10-hour TWA, mg/m³	ACGIH 2017 TLV 8hrs TWA, mg/m³
Amorphous Silica	7631-86-9	.05 mg/m³	(Total Dust) 10 mg/m³ (Respirable fraction) 5 mg/m³	No Data	No Data
Portland Cement	65997-15-1	(Total Dust) 10 (Respirable fraction) 5	(Total Dust) 10 mg/m³ (Respirable fraction) 5 mg/m³	(Total Dust) 10 mg/m³ (Respirable fraction) 5 mg/m³	1 mg/m³ (no asbestos & < 1% crystalline silica)
Calcium Sulfate Dihydrate (Gypsum)	13397-24-5	(Total Dust) 15 (Respirable fraction) 5	(Total Dust) 10 mg/m³ (Respirable fraction) 5	(Total Dust) 10 mg/m³ (Respirable fraction) 5	No Data
Calcium Carbonate (Limestone)	1317-65-3	15	10 mg/m³	10 mg/m³	No Data
Crystalline Silica (Quartz), Respirable	14808-60-7	No Data	.05 mg/m³	.05 mg/m³	.025 mg/m³

ENGINEERING CONTROLS:	Avoid actions that cause dust to become airborne. Use local exhaust or general dilution ventilation to control exposure within applicable limits.

PERSONAL PROTECTIVE EQUIPMENT (PPE).

RESPIRATORY PROTECTION:	Use local exhaust or general dilution ventilation to control dust levels below applicable exposure limits. Minimize dispersal of dust into air. If local or general ventilation is not adequate to control dust levels below applicable exposure limits or when dust causes irritation or discomfort, use MSHA/NIOSH approved respirators.
EYE PROTECTION:	Wear safety glasses with side shields or goggles to avoid contact with eyes. In extreme dusty environments and unpredictable environments, wear tight fitting unvented or indirectly vented goggles to avoid eye irritation or injury. Contact lenses should not be worn when handling cement or cement containing products.
SKIN PROTECTION:	Wear impervious abrasion and alkali-resistant gloves, boots, long sleeve shirt, long pants or other protective clothing to prevent skin contact. Promptly remove clothing dusty with Spray Mix or clothing dampened with moisture mixed with Spray Mix, and launder before re-use. If contact occurs, wash areas contacted by material with pH neutral soap and water.

SECTION 9 – PHYSICAL AND CHEMICAL PROPERTIES

VISCOSITY	Not Applicable		**APPERANCE:**	Gray or White fine powder
ODOR & ODOR THRESHOLD:	Odorless		**FLASH POINT:**	Not Applicable, Not Flammable, Not Combustible
BOILING POINT:	>1000°C		**MELTING POINT:**	>1000°C
EVAPORATION RATE:	Not Applicable		**FLAMMABILITY (SOLID/GAS)**	Not Applicable
VAPOR PRESSURE:	Not applicable		**pH (IN WATER): (ASTM D 1293-95)**	12-13
VAPOR DENSITY:	Not applicable		**SOLUBILITY IN WATER:**	Slightly (0.1%-1.0%)
RELATIVE DENSITY	Not Applicable		**UPPER/LOWER FLAMMABILITY**	Not Flammable, Not Explosive
PARTITION COEFFICIENT: n-octano/wtr.	Not Applicable		**AUTO IGNITION TEMPERATURE**	Not Flammable

SECTION 10 – STABILITY AND REACTIVITY

CHEMICAL STABILITY:	Product is stable under recommended storage conditions. Keep dry until used.
CHEMICAL REACTIVITY:	Hazardous Polymerization: Will not occur. Corrosion to Metals: Has corrosive effects to metal. Oxidizing Properties: Not classified as oxidizing.
CONDITIONS TO AVOID:	Unintentional contact with water or high humidity. Contact with water will result in hydration and produces (caustic) calcium hydroxide and heat. Avoid generation of dust.
INCOMPATIBILITY:	- **Silica** reacts violently with powerful oxidizing agents such as hydrofluoric acid, fluorine, boron trifluoride, chlorine trifluoride, manganese trifluoride, oxygen difluoride, hydrogen peroxide, acetylene, ammonia yielding possible fire and/or explosions. Silicates dissolve readily in hydrofluoric acid producing a corrosive gas silicon tetrafluoride. - **Portland Cement** is highly alkaline and will react with acids to produce a violent, heat-generating reaction. Released toxic gases or vapors will depend on the acid involved. Aluminum powder and other alkali and alkaline earth elements will react in wet mortar or concrete, liberating hydrogen gas. Reacts slowly with water forming hydrated compounds, releasing heat and producing a strong alkaline solution until reaction is substantially complete. - **Calcium Sulfate Dihydrate (Gypsum):** Reacts with Aluminum (at high temperatures), diazomethane. - **Calcium Carbonate (Limestone)** ignites on contact with fluorine and is incompatible with acids, alum, ammonium salts, and magnesium
HAZARDOUS DECOMPOSITION:	Will not spontaneously occur. Adding water results in hydration and produces (caustic) calcium hydroxide. Under normal conditions of storage and use, hazardous decomposition products should not be produced. In fire conditions, depending on temperature, air supply and presence of other materials, decomposition products can include, but are not limited to carbon dioxide, carbon monoxide, silica oxides, sulfur oxides, metal oxides.

SECTION 11 – TOXOCOLOGY INFORMATION

LIKELY ROUTES OF EXPOSURE:	Skin and Eye Contact, Inhalation and Ingestion.

SYMPTOMS OF EXPOSURE:

ACUTE TOXICITY	**INGESTION:**	Harmful if swallowed. Adverse symptoms may include burns to mouth, throat and stomach, abdominal pain, nausea and diarrhea. Although inadvertent ingestion of small quantities of wet concrete or its dry ingredients are not known to be harmful, ingestion of larger quantities can be harmful and requires immediate medical attention
	INHALATION:	May cause respiratory tract irritation and coughing. Some ingredients may contain trace amounts of crystalline silica. Exposure to these ingredients in excess of the applicable TLV or PEL (see Section 2) may cause or aggravate other lung conditions. Exposure to Portland cement may cause irritation to the moist mucous membranes of the nose, throat, and upper respiratory system. It may also leave unpleasant deposits in the nose. May cause allergy or asthma symptoms or breathing difficulties if inhaled.
	SKIN CORROSION SKIN IRRITATION	Exposure during the handling or mixing of the dry ingredients may cause drying of the skin with consequent mild irritation or more significant effects attributable to aggravation of other conditions. Exposure to wet concrete may cause more severe skin effects including thickening, cracking or fissuring of the skin. Prolonged exposure can cause severe skin damage in the form of (caustic) chemical burns. May cause skin burns. A more severe response may be expected if skin is abraded (scratched or cut). The response may appear in a variety of forms ranging from a mild rash to severe skin ulcers. Persons already sensitized may react to their first contact with the product. Other persons may first experience this effect after years of contact.
	SERIOUS EYE DAMAGE & IRRITATION	Wet or Dry product may cause serious eye damage. Adverse symptoms may include tearing, redness, pain and in the worst case blindness. Dust may cause abrasion of the cornea. wet concrete may cause effects ranging from moderate eye irritation to chemical burns and blindness
	SPECIFIC TARGET ORGAN GENERAL TOXICITY: SINGLE EXPOSURE:	This product contains components that may cause respiratory tract irritation after single exposure.
	SPECIFIC TARGET ORGAN GENERAL TOXICITY: REPEAT EXPOSURE	This product contains components that may cause respiratory tract irritation (asthma, bronchitis, emphysema, and chronic obstructive pulmonary disease), lung disease or lung cancer, kidney disease, tuberculosis, silicosis, autoimmune and kidney diseases after prolonged and repeat exposure to airborne free respirable crystalline silica if product is handled without adequate protection.
	ASPIRATION HAZARD:	Not an aspiration hazard.

CHRONIC TOXICITY	**Respiratory and Skin Sensitizer:**	This product contains trace amounts of chemical (impurity) that is reported to be a skin sensitizer. Chromium (VI) Compounds, CAS #: 18540-29-9: skin sensitizer; present in Portland Cement at level <0.1%			
	Generative Cell Mutagenicity	Risk to humans is not expected from exposure to this product			
	Carcinogenicity:	**This product contains components reported to be carcinogenic to humans. Group 1).**	Crystalline Silica (QUARTZ), CAS #: 14808-60-7:	IARC:	Group 1 (Carcinogenic to humans)
				NTP:	Known to be a Human Carcinogen (Respirable size)
				ACGIH:	Group A2 (Suspected Human Carcinogen)
				NIOSH:	Potential occupational carcinogen
			Amorphous Silica, CAS #: 7631-86-9:	IARC:	Group 3 (Not Classifiable as to its Carcinogenicity to Humans)
			Portland Cement CAS # 65997-15-1	ACGIH	A4 - Not Classifiable as a Human Carcinogen
			Chromium (VI) Compounds, CAS #: 18540-29-9:	IARC:	Group 1 (Carcinogenic to humans)
			Titanium dioxide, CAS #: 13463-67-7:	IARC:	Group 2B (Possibly Carcinogenic to Humans)
				ACGIH:	Not classifiable as human carcinogen

Reproductive Toxicity:	Risk to humans is not expected from exposure to this product. However, this product contains trace amounts of chemical (impurities) that are reported to cause developmental issues. Chromium (VI) Compounds, CAS #: 18540-29-9 and Methyl alcohol, CAS #: 67-56-1

General Product Warning:	May cause cancer. Prolonged and repeated exposure to airborne free respirable crystalline silica can result in lung disease and/or lung cancer. IARC states that crystalline silica in the form of quartz or cristobalite from occupational sources is carcinogenic to humans (Group 1).

SECTIONS 12 – ECOLOGICAL INFORMATION

ECOTOXICITY	Not classified as environmentally hazardous. However, this does not exclude the possibility that large or frequent spills can have a harmful or damaging effect on the environment.
PERSISTENCE AND DEGRADABILITY:	No information available for the product, believed to be not readily biodegradable by OECD criteria.
BIOACCUMULATIVE POTENTIAL:	No information is available for the product, but it is believed that no significant accumulation in organisms is expected
MOBILITY IN SOIL:	No information is available for the product, but it is believed that mobility in soil is not expected
OTHER ADVERSE EFFECTS:	No information is available for the product

ECOTOXICITY TEST RESULTS: No information is available for this product mixture. Results for components, where available:

Crystalline Silica (Quartz), CAS #: 14808-60-7	Not known to be ecotoxic; no data suggests that is toxic to birds, fish, invertebrates, microorganisms or plants.
Calcium Sulfate Dihydrate (Gypsum), CAS #:13397-24-5	Not classified as environmentally hazardous; However, this does not exclude harmful or damaging effect on the environment in the case of large or frequent spills. Fish: LC50 (Fathead minnow), 96hrs: >1970 mg/L. Biodegradability: Not applicable for the salt of inorganic compounds. Bioaccumulation: not expected. Mobility in Soil: a low potential for adsorption to soil; however, it dissolves in presence of water.
Calcium Carbonate (Limestone), CAS #: 1317-65-3	Acute toxicity Fish LC50 (Rainbow Trout), 96hrs: >10,000 mg/L Aquatic invertebrates EC50 (Daphnia magna), 48hrs: >1,000 mg/L Aquatic plants EC50 (Algae), 72hrs: >200 mg/L In solid state, this mineral is a major part of the rocks of earth's surface and is not biodegradable. Negative effect on environment should be therefore excluded. It is dissolved in a natural state and indispensable part of natural waters. Concentrated suspensions of minerals in natural waters may have an unfavorable effect on water organisms.

SECTION 13 – DISPOSAL CONSIDERATIONS

PRODUCT DISPOSAL:	The generation of waste should be avoided or minimized wherever possible. If product becomes a waste, it does not meet criteria of hazardous waste as defined in 40 CFR 261, Subpart C and D. Do not discharge or dump material into sewer system, the ground or bodies of water. Spill cleanup residues may still be subject to RCRA storage and disposal requirements. Dispose waste in compliance with local, state and federal regulations via licensed waste disposal contractor. See Section 7 for Handling Procedures. See Section 8 for Personal Protective Equipment recommendations
CONTAINER DISPOSAL:	Even after emptying, container may retain residues. Containers should be completely emptied and safely stored until appropriately reconditioned or dispose of (contents/container) in accordance with local/regional/national/international regulations.

SECTION 14 – TRANSPORTATION CONSIDERATIONS

Land transport, U.S. DOT:	Non-Regulated
Sea transport, IMDG	Non-Regulated
Air transport, IATA/ICAO:	Non-Regulated

SECTION 15 – REGULATORY INFORMATION (Non-Mandatory Section as per OSHA: Not a Complete List)

U.S. REGULATIONS

OSHA HCS:	This product is a "Hazardous Chemical" as defined by the OSHA Hazard Communication Standard, 29CFR 1910.1200.
TSCA REGULATIONS:	All components of this product are listed or are exempt from TSCA Inventory requirements under 40 CFR 720.30
EPCRA Section 302 (40 CFR Part 355)	(Emergency Response Planning, Extremely Hazardous Substance): No components are subject to the reporting.
EPCRA Section 304 (40 CFR Part 355	(Emergency Release Notification Requirements): No components are subject to the reporting.
EPCRA Sections 311 & 312	(Hazardous Chemical Inventory Reporting, Hazard Categories): Acute Health Hazard, Chronic Health Hazard
EPCRA Section 313 40 CFR Part 372)	(Toxic Chemical Release Inventory Reporting): No components or impurities of this product are present above De Minimis level and therefore do not require reporting.
CERCLA Sections 102-103 (40 CFR Part 302)	(Hazardous Substances Release Notification): No components are subject to the reporting. Some of the components contain trace amounts of the following chemicals that require reporting if a criterion of reportable quantity is fulfilled: Fine Mineral Fibers of average diameter ≤1µm (including Crystalline Silica, CAS #: 14808-60-7 with diameter ≤1µm) Chromium (VI) Compounds, CAS #: 18540-29-9: *for Chromium, CAS #: 7440-47-3: RQ: 5,000 lbs Methyl alcohol, CAS #: 67-56-1: RQ: 5,000 lbs
CLEAN AIR ACT	Ozone Depleting Substances (ODS): This product does not contain and is not manufactured with ozone depleting substances. Hazardous Air Pollutants, OSHA, Section 112(b), Table Z-1 and Table Z-3:

COMPONENT ANALYSIS - STATE

STATE	INFORMATION
CA	The following statement(s) are provided under the California Safe Drinking Water and Toxic Enforcement Act of 1986 (Proposition 65): **WARNING!** This product contains chemicals known to the state of California to cause cancer, birth defects, or other reproductive harm.

SECTION 16 – OTHER INFORMATION

HAZARDOUS MATERIAL INFORMATION SYSTEM (HMIS)
NFPA/HMIS Definitions: 0-Least, 1-Slight, 2-Moderate, 3-High, 4-Extreme
E-Protective Equipment: Safety glasses, gloves, Dust Respirator

Health	**1**
Flammability	**0**
Reactivity	**0**
Personal Protection	**E**

OTHER INFORMATION:
SELLER MAKES NO WARRANTY, EXPRESS OR IMPLIED, CONCERNING THE PRODUCT OR THE MERCHANTABILITY OR FITNESS THEREOF FOR ANY PURPOSE OR CONCERNING THE ACCURACY OF ANY INFORMATION PROVIDED BY TURLET INTERNATIONAL RSOURCES, LLC., except that the product shall conform to contracted specifications. The information provided herein was believed by TURLEY INTERNATIONAL RESOURCES, LLC. to be accurate at the time of preparation or prepared from sources believed to be reliable, but it is the responsibility of the user to investigate and understand other pertinent sources of information to comply with all laws and procedures applicable to the safe handling and use of the product and to determine the suitability of the product for its intended use. Buyer's exclusive remedy shall be for damages and no claim of any kind, whether as to product delivered or for non-delivery of product, failure of product due to manufacturers defect, and whether based on contract, breach of warranty, negligence, or otherwise shall be greater in amount than the purchase price of the quantity of product in respect of which damages are claimed. In no event shall Seller be liable for incidental or consequential damages or labor of any kind, whether Buyer's claim is based on contract, breach of warranty, negligence, manufacturers defect, product failure, or otherwise.

REVISED: October 1st , 2020
REVISED BY: BG: Stone Edge Surfaces Smooth Coat SDS v1.2 021517 – Word

Rest of Sheet Purposely Left Blank

END OF SHEET

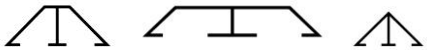

SAFETY DATA SHEET

SECTION 1: CHEMICAL PRODUCT AND COMPANY IDENTIFICATION

Product: Rigid PVC - all colors **Extruded Void Cap, Double Chamfers, Reveals, Loc Joints** **Part Numbers : 21A-VC-375, VC-500, VC-750, VC-1000, STix 1-10, LJ-1, LJ-1 -3/8, LJ-3/4, LJ-1-1/2**

Manufacturer: VEKA Inc. 100 Veka Drive Fombell, PA 16123 1325 Bixby Drive City of Industry, CA 91745

Telephone: **Emergency Phone** 724-452-1000
Revision Date: **11/23/2013** **Info Phone** 724-452-1000
Product Use: Various uses as Expansion or forming products for concrete construction

SECTION 2: HAZARDS IDENTIFICATION/EXPOSURE LIMITS

WHMIS (Canada) (NPPA 704) Classification:

|Health|	**|0|**	Products are classified as non-hazardous per OSHA 1910.1200. These products are defined by OSHA as an "article." A manufactured item that is formed to a specific shape or design during manufacture that does not release or result in exposure to a hazardous chemical under normal use conditions.
|Flammability|	**|0|**	
|Reactivity|	**|0|**	
|Personal Protection|	**|0|**	

SECTION 3: HAZARDOUS COMPONENTS

Chemical Name:	**CAS Number :**	**Percentage By Weight**
Polyvinyl Chloride Resin (PVC)	9002-86-2	< 90
Acrylic Copolymers	N/A	< 10
Calcium Carbonate	1317-65-3	< 5
Calcium Stearate	1592-23-0	< 3
Paraffin Wax	8002-74-2	< 3

Under the reporting requirements of Section 313 of Title III of the Superfund Amendments and Reauthorization Act of 1966 (SARA) and 40 CFR Part 372, chemicals listed on the 313 list (40 CFR Part 373.65) are identified under heading "SARA 313."

SECTION 4: EMERGENCY AND FIRST AID PROCEDURES

EYE CONTACT: None normally required.
SKIN CONTACT: None normally required.
INHALATION: None normally required.
INGESTION: Not expected to be an exposure source.

SECTION 5: FIRE AND EXPLOSIVES HAZARDS

FLASHPOINT: Not Applicable
EXTINGUISHING MEDIA: Water spray, CO_2, dry powder extinguisher.
CHEMICAL/COMBUSTION HAZARDS: Incomplete combustion products may contain toxic components. Avoid inhalation of smoke.
PRECAUTIONS/PERSONAL PROTECTIVE EQUIPMENT: Avoid Smoke Inhalation. Use appropriate respiratory protection.

SECTION 6: ACCIDENTAL RELEASE MEASURES

SPILL OR LEAK PROCEDURES: Not applicable. Product is a solid.

SECTION 7: HANDLING AND STORAGE

SAFE HANDLING PROCEDURES: No special requirements
SAFE STORAGE: None

SECTION 8: EXPOSURE CONTROLS/PERSONAL PROTECTION

ENGINEERING CONTROLS: None required under normal conditions of use.
PERSONAL PROTECTIVE EQUIPMENT: None required under normal conditions of use.

SECTION 9: PHYSICAL AND CHEMICAL PROPERTIES

BOILING POINT: N/A	**VAPOR DENSITY:** N/A	**% VOLATILE BY VOLUME:** N/A
EVAPORATION RATE: N/A	**pH LEVEL:** N/A	**% VOLATILE BY WEIGHT:** N/A
WEIGHT PER GALLON: N/A	**PRODUCT APPEARANCE:** Solid plastic	**VOC CONTENT:** N/A

SAFETY DATA SHEET

SECTION 10: STABILITY/REACTIVITY

STABILITY: Stable
HAZARDOUS POLYMERIZATION: Will not occur.
CONDITIONS AND MATERIALS TO AVOID: None recognized.
HAZARDOUS DECOMPOSITION PRODUCTS: None recognized.

SECTION 11: TOXICOLOGICAL INFORMATION

EYE CONTACT: No adverse effects known with normal product use.
SKIN CONTACT: No adverse effects with normal product use.
INHALATION: Not anticipated to be an exposure route.
INGESTION: Not anticipated to be an exposure route.
SIGNS AND SYMPTOMS: Symptoms of eye irritation include tearing, reddening, and swelling. Symptoms of skin irritation include redness and swelling. Gastrointestinal irritation symptoms include nausea, vomiting, and abdominal discomfort.
AGGRAVATED MEDICAL CONDITIONS: None recognized.
OTHER HEALTH EFFECTS: None recognized

SECTION 12: ECOLOGICAL INFORMATION

ECOTOXICITY:
DEGRADABILITY:
BIOACCUMULATIVE POTENTIAL: N/E
SOIL MOBILITY:
OTHER ADVERSE AFFECTS: None Recognized

SECTION 13: WASTE DISPOSAL INFORMATION

WASTE DISPOSAL INFORMATION: Product is classified as a non-hazardous waste. It can be re-processed and re-cycled in accordance with federal, state and local regulations.

SECTION 14: TRANSPORTATION INFORMATION

HAZARDOUS/NON-HAZARDOUS MATERIAL: Not regulated by DOT.
UN NUMBER: None
HAZARD CLASS:
PACKING GROUP: N/A
UN PROPER SHIPPING NAME: N/A
ENVIRONMENTAL HAZARDS: None recognized.
BULK TRANSPORTATION INFORMATION:
SPECIAL PRECAUTIONS: None.

SECTION 15: REGULATORY INFORMATION

OTHER REGULATORY CONSIDERATIONS: None recognized.

SECTION 16: OTHER INFORMATION

Preparation Date: 11/23/13 Prepared by: Len C. Maggio

The information contained in this document is based on data available to us and is believed to be correct. However, Superior Profiles makes no warranty , expressed or implied regarding the accuracy of this data or the results to be obtained from the use thereof. We assume no responsibility for injury from the use of this product described herein.

SUPERIOR PROFILES
MANUFACTURER OF PLASTIC EXTRUSIONS

SUPERIOR PROFILES | MANUFACTURER OF PLASTIC EXTRUSIONS

Rigid PVC, All-Colors: Extruded VoidCap, Double Chamfer, Reveal & Loc Joint

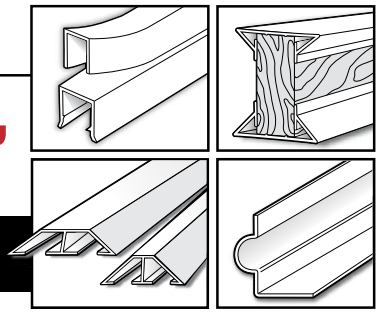

SAFETY DATA SHEET:

1. CHEMICAL PRODUCT AND COMPANY IDENTIFICATION

Product: Rigid PVC - all colors Extruded Void Cap, Double Chamfers, Reveals, Loc Joints
Part Numbers : 21A-VC-375, VC-500, VC-750, VC-1000, STix 1-10, LJ-1, LJ-1 -3/8, LJ-3/4, LJ-1-1/2
Manufacturer: VEKA Inc. 100 Veka Drive Fombell, PA 16123 1325 Bixby Drive, Industry, CA 91745
Telephone: Emergency Phone 724-452-1000 Revision Date: 11/23/2013 Info Phone 724-452-1000
Product Use: Various uses as Expansion or forming products for concrete construction

2. HAZARDS IDENTIFICATION/EXPOSURE LIMITS

WHMIS	(Canada)	(NPPA 704) Classification:
|Health|	|0|	Products are classified as non-hazardous per OSHA 1910.1200. These products are
|Flammability|	|0|	defined by OSHA as an "article." A manufactured item that is formed to a specific shape or
|Reactivity|	|0|	design during manufacture that does not release or result in exposure to a hazardous
|Personal Protection|	|0|	chemical under normal use conditions.

3. HAZARDOUS COMPONENTS

Chemical Name:	Polyvinyl Chloride Resin (PVC)	**CAS Number:**	9002-86-2	**Percentage By Weight**	< 90
Acrylic Copolymers			N/A		< 10
Calcium Carbonate			1317-65-3		< 5
Calcium Stearate			1592-23-0		< 3
Paraffin Wax			8002-74-2		< 3

Under the reporting requirements of Section 313 of Title III of the Superfund Amendments and Reauthorization Act of 1966 (SARA) and 40 CFR Part 372, chemicals listed on the 313 list (40 CFR Part 373.65) are identified under heading "SARA 313."

4. EMERGENCY AND FIRST AID PROCEDURES

EYE CONTACT: None normally required.
SKIN CONTACT: None normally required.
INHALATION: None normally required.
INGESTION: Not expected to be an exposure source.

5. FIRE AND EXPLOSIVES HAZARDS

FLASHPOINT: Not Applicable
EXTINGUISHING MEDIA: Water spray, CO2, dry powder extinguisher.
CHEMICAL/COMBUSTION HAZARDS: Incomplete combustion products may contain toxic components. Avoid inhalation of smoke.
PRECAUTIONS/PERSONAL PROTECTIVE EQUIPMENT: Avoid Smoke Inhalation. Use appropriate respiratory protection.

6. ACCIDENTAL RELEASE MEASURES

SPILL OR LEAK PROCEDURES: Not applicable. Product is a solid.

7. HANDLING AND STORAGE

SAFE HANDLING PROCEDURES: No special requirements
SAFE STORAGE: None

8. EXPOSURE CONTROLS/PERSONAL PROTECTION

ENGINEERING CONTROLS: None required under normal conditions of use.
PERSONAL PROTECTIVE EQUIPMENT: None required under normal conditions of use.

9. PHYSICAL AND CHEMICAL PROPERTIES

BOILING POINT: N/A
VAPOR DENSITY: N/A
% VOLATILE BY VOLUME: N/A
EVAPORATION RATE: N/A
pH LEVEL: N/A
% VOLATILE BY WEIGHT: N/A
WEIGHT PER GALLON: N/A
PRODUCT APPEARANCE: Solid plastic
VOC CONTENT: N/A

10. STABILITY/REACTIVITY

STABILITY: Stable
HAZARDOUS POLYMERIZATION: Will not occur.
CONDITIONS AND MATERIALS TO AVOID: None recognized.
HAZARDOUS DECOMPOSITION PRODUCTS: None recognized.

11. TOXICOLOGICAL INFORMATION

EYE CONTACT: No adverse effects known with normal product use.
SKIN CONTACT: No adverse effects with normal product use.
INHALATION: Not anticipated to be an exposure route.
INGESTION: Not anticipated to be an exposure route.
SIGNS & SYMPTOMS: Symptoms of eye irritation include tearing, reddening, and swelling. Symptoms of skin irritation include redness and swelling. Gastrointestinal irritation symptoms include nausea, vomiting and abdominal discomfort.
AGGRAVATED MEDICAL CONDITIONS: None recognized.
OTHER HEALTH EFFECTS: None recognized

12. ECOLOGICAL INFORMATION

ECOTOXICITY:
DEGRADABILITY:
BIOACCUMULATIVE POTENTIAL: N/E
SOIL MOBILITY:
OTHER ADVERSE AFFECTS: None Recognized

13. WASTE DISPOSAL INFORMATION

WASTE DISPOSAL INFORMATION: Product is classified as a non-hazardous waste. It can be re-processed and re-cycled in accordance with federal, state and local regulations.

14. TRANSPORTATION INFORMATION

HAZARDOUS/NON-HAZARDOUS MATERIAL: Not regulated by DOT.
UN NUMBER: None
HAZARD CLASS:
PACKING GROUP: N/A
UN PROPER SHIPPING NAME: N/A
ENVIRONMENTAL HAZARDS: None recognized.
BULK TRANSPORTATION INFORMATION:
SPECIAL PRECAUTIONS: None.

15. REGULATORY INFORMATION

OTHER REGULATORY CONSIDERATIONS: None recognized.

Preparation Date: 11/23/13 **Prepared by: Len C. Maggio**

The information contained in this document is based on data available to us and is believed to be correct. However, Superior Profiles makes no warranty, expressed or implied regarding the accuracy of this data or the results to be obtained from the use thereof. We assume no responsibility for injury from the use of this product described herein.

SAFETY DATA SHEET

SYNTHEBOND™ 8818

Version	Revision Date:	Date of last issue: -
1.0	05/12/2022	Date of first issue: 05/12/2022

SECTION 1. IDENTIFICATION

Product name : SYNTHEBOND™ 8818

Manufacturer or supplier's details

Company name of supplier : Synthomer USA LLC

Address : Little Falls Drive
Wilmington, Delaware 19808

Emergency telephone : USA +1 866 928 0789 (toll free) // Americas # +1 215 207 0061 // Global (EN speaking only) +44 1865 407333
# NCEC's regional number (involves operator intervention to identify language)

SECTION 2. HAZARDS IDENTIFICATION

GHS classification in accordance with the OSHA Hazard Communication Standard (29 CFR 1910.1200)

Not a hazardous substance or mixture.

GHS label elements

Not a hazardous substance or mixture.

Other hazards

None known.

SECTION 3. COMPOSITION/INFORMATION ON INGREDIENTS

Components

SECTION 4. FIRST AID MEASURES

General advice : Do not leave the victim unattended.

If inhaled : If unconscious, place in recovery position and seek medical advice.
If symptoms persist, call a physician.

In case of skin contact : Take off contaminated clothing and shoes immediately.
Wash off with soap and plenty of water.
If skin irritation persists, call a physician.

In case of eye contact : Immediately flush eye(s) with plenty of water.
Remove contact lenses.
Protect unharmed eye.
If eye irritation persists, consult a specialist.

If swallowed : Keep respiratory tract clear.

		Do not give milk or alcoholic beverages. Never give anything by mouth to an unconscious person. If symptoms persist, call a physician.
Most important symptoms and effects, both acute and delayed	:	None known.
Notes to physician	:	Treat symptomatically.

SECTION 5. FIRE-FIGHTING MEASURES

Suitable extinguishing media	:	Use extinguishing measures that are appropriate to local circumstances and the surrounding environment.
Unsuitable extinguishing media	:	None known.
Further information	:	Standard procedure for chemical fires. Use extinguishing measures that are appropriate to local circumstances and the surrounding environment.
Special protective equipment for fire-fighters	:	Wear self-contained breathing apparatus for firefighting if necessary.

SECTION 6. ACCIDENTAL RELEASE MEASURES

Personal precautions, protective equipment and emergency procedures	:	Use personal protective equipment.
Methods and materials for containment and cleaning up	:	Large spills should be collected mechanically (remove by pumping) for disposal. Wipe up with absorbent material (e.g. cloth, fleece). Keep in suitable, closed containers for disposal.

SECTION 7. HANDLING AND STORAGE

Advice on protection against fire and explosion	:	Normal measures for preventive fire protection.
Advice on safe handling	:	For personal protection see section 8. Smoking, eating and drinking should be prohibited in the application area.
Conditions for safe storage	:	Keep in properly labeled containers.
Materials to avoid	:	No materials to be especially mentioned.
Further information on storage stability	:	No decomposition if stored and applied as directed.

SECTION 8. EXPOSURE CONTROLS/PERSONAL PROTECTION

Ingredients with workplace control parameters

Personal protective equipment

Respiratory protection	:	No personal respiratory protective equipment normally required.
Hand protection		
Directive	:	Equipment should conform to EN 374
Material	:	Nitrile rubber
Eye protection	:	Safety glasses
Skin and body protection	:	Protective suit
Protective measures	:	Ensure that eye flushing systems and safety showers are located close to the working place.
Hygiene measures	:	General industrial hygiene practice.

SECTION 9. PHYSICAL AND CHEMICAL PROPERTIES

Appearance	:	liquid
Color	:	No data available
Odor	:	No data available
Odor Threshold	:	No data available
pH	:	No data available
Melting point/freezing point	:	No data available
Boiling point/boiling range	:	No data available
Flash point	:	No data available
Self-ignition	:	No data available
Upper explosion limit / Upper flammability limit	:	No data available
Lower explosion limit / Lower flammability limit	:	No data available
Vapor pressure	:	No data available
Relative vapor density	:	No data available

Relative density	:	No data available
Density	:	No data available
Solubility(ies)		
Water solubility	:	No data available
Solubility in other solvents	:	No data available
Partition coefficient: n-octanol/water	:	No data available
Viscosity		
Viscosity, dynamic	:	No data available
Viscosity, kinematic	:	No data available

SECTION 10. STABILITY AND REACTIVITY

Reactivity	:	No decomposition if stored and applied as directed.
Chemical stability	:	No decomposition if stored and applied as directed.
Possibility of hazardous reactions	:	Stable under recommended storage conditions.
Conditions to avoid	:	Protect from frost, heat and sunlight.
Incompatible materials	:	Not applicable
Hazardous decomposition products	:	No hazardous decomposition products are known.

SECTION 11. TOXICOLOGICAL INFORMATION

Acute toxicity

Not classified based on available information.

Skin corrosion/irritation

Not classified based on available information.

Serious eye damage/eye irritation

Not classified based on available information.

Respiratory or skin sensitization

Skin sensitization

Not classified based on available information.

Respiratory sensitization

Not classified based on available information.

Germ cell mutagenicity

Not classified based on available information.

Carcinogenicity

Not classified based on available information.

IARC No ingredient of this product present at levels greater than or equal to 0.1% is identified as probable, possible or confirmed human carcinogen by IARC.

OSHA No component of this product present at levels greater than or equal to 0.1% is on OSHA's list of regulated carcinogens.

NTP No ingredient of this product present at levels greater than or equal to 0.1% is identified as a known or anticipated carcinogen by NTP.

Reproductive toxicity

Not classified based on available information.

STOT-single exposure

Not classified based on available information.

STOT-repeated exposure

Not classified based on available information.

Aspiration toxicity

Not classified based on available information.

Further information

Product:

Remarks : Information taken from reference works and the literature.

SECTION 12. ECOLOGICAL INFORMATION

Ecotoxicity

No data available

Persistence and degradability

No data available

Bioaccumulative potential

No data available

Mobility in soil

No data available

Other adverse effects

Product:

Additional ecological information : Information given is based on data on the ingredients and the ecotoxicology of similar products.

SECTION 13. DISPOSAL CONSIDERATIONS

Disposal methods

Waste from residues : Dispose of wastes in an approved waste disposal facility.

Contaminated packaging : Empty containers should be taken to an approved waste han-

dling site for recycling or disposal.

SECTION 14. TRANSPORT INFORMATION

International Regulations

UNRTDG
Not regulated as a dangerous good

IATA-DGR
Not regulated as a dangerous good

IMDG-Code
Not regulated as a dangerous good

Transport in bulk according to Annex II of MARPOL 73/78 and the IBC Code
Not applicable for product as supplied.

Domestic regulation

49 CFR
Not regulated as a dangerous good

SECTION 15. REGULATORY INFORMATION

SARA 311/312 Hazards : No SARA Hazards

SECTION 16. OTHER INFORMATION

Full text of other abbreviations

AICS - Australian Inventory of Chemical Substances; AIIC - Australian Inventory of Industrial Chemicals; ASTM - American Society for the Testing of Materials; bw - Body weight; CERCLA - Comprehensive Environmental Response, Compensation, and Liability Act; CMR - Carcinogen, Mutagen or Reproductive Toxicant; DIN - Standard of the German Institute for Standardisation; DOT - Department of Transportation; DSL - Domestic Substances List (Canada); ECx - Concentration associated with x% response; EHS - Extremely Hazardous Substance; ELx - Loading rate associated with x% response; EmS - Emergency Schedule; ENCS - Existing and New Chemical Substances (Japan); ErCx - Concentration associated with x% growth rate response; ERG - Emergency Response Guide; GHS - Globally Harmonized System; GLP - Good Laboratory Practice; HMIS - Hazardous Materials Identification System; IARC - International Agency for Research on Cancer; IATA - International Air Transport Association; IBC - International Code for the Construction and Equipment of Ships carrying Dangerous Chemicals in Bulk; IC50 - Half maximal inhibitory concentration; ICAO - International Civil Aviation Organization; IECSC - Inventory of Existing Chemical Substances in China; IMDG - International Maritime Dangerous Goods; IMO - International Maritime Organization; ISHL - Industrial Safety and Health Law (Japan); ISO - International Organisation for Standardization; KECI - Korea Existing Chemicals Inventory; LC50 - Lethal Concentration to 50 % of a test population; LD50 - Lethal Dose to 50% of a test population (Median Lethal Dose); MARPOL - International Convention for the Prevention of Pollution from Ships; MSHA - Mine Safety and Health Administration; n.o.s. - Not Otherwise Specified; NFPA - National Fire Protection Association; NO(A)EC - No Observed (Adverse) Effect Concentration; NO(A)EL - No Observed (Adverse) Effect Level; NOELR - No Observable Effect Loading Rate; NTP - National Toxicology Program; NZIoC - New Zealand Inventory of Chemicals; OECD - Organization for Economic Co-operation and Development; OPPTS - Office of Chemical Safety and Pollution Prevention; PBT - Persistent, Bioaccumulative and Toxic substance; PICCS - Philippines Invento-

ry of Chemicals and Chemical Substances; (Q)SAR - (Quantitative) Structure Activity Relationship; RCRA - Resource Conservation and Recovery Act; REACH - Regulation (EC) No 1907/2006 of the European Parliament and of the Council concerning the Registration, Evaluation, Authorisation and Restriction of Chemicals; RQ - Reportable Quantity; SADT - Self-Accelerating Decomposition Temperature; SARA - Superfund Amendments and Reauthorization Act; SDS - Safety Data Sheet; TCSI - Taiwan Chemical Substance Inventory; TSCA - Toxic Substances Control Act (United States); UN - United Nations; UNRTDG - United Nations Recommendations on the Transport of Dangerous Goods; vPvB - Very Persistent and Very Bioaccumulative

Revision Date : 05/12/2022

The information provided in this Safety Data Sheet is correct to the best of our knowledge, information and belief at the date of its publication. The information given is designed only as a guidance for safe handling, use, processing, storage, transportation, disposal and release and is not to be considered a warranty or quality specification. The information relates only to the specific material designated and may not be valid for such material used in combination with any other materials or in any process, unless specified in the text.

US / EN

Material Safety Data Sheet

Tietex International, Ltd.
3010 North Blackstock Rd.
Spartanburg, SC 29301

Issue Date: 5/18/09
Revised: N/A

Section I: Product Identification

Product Name: Style T325
Generic Name/Description: Printed polyester stitchbonded fabric
CAS Number: N/A

Section II: Hazardous Ingredients

This product contains no hazardous ingredients as defined by OSHA 29 CFR part 1910.1200.

Component Information

Component	% in Product
Polyester	100%

Section III: Physical Data

Per OSHA 29 CFR part 1910.1200 this product is defined as an "article." As a result, most physical data (such as vapor pressure and flash point) applicable to chemicals do not apply.

Polyester – a thermoplastic fiber that melts prior to combustion
Melt Point: 265 degrees C
Specific Gravity: 1.34-1.39

Section IV: Fire & Explosion Data

Combustion of this product may produce hydrogen, oxygen, carbon, nitrogen and/or oxides of carbon and nitrogen. Firefighters should take precautions against breathing combustion gases. Molten polyester can cause severe burns to the skin. Those involved in flame evaluation of the product should avoid breathing any combustion fumes or gases. Decomposition products generated from molten polymer may be subject to auto ignition.

Section V: Reactivity Data

Stability: Product is stable
Incompatibility: None

Hazardous Decomposition Products: Combustion of this product may produce hydrogen, oxygen, carbon, nitrogen and/or oxides of carbon and nitrogen.

Hazardous Polymerization: Hazardous polymerization will not occur.

Section VI: Health Hazard Data

Exposure to Tietex fabrics described in this MSDS should pose no health risks or health problems during normal conditions of handling in manufacturing or during normal conditions of use.

Section VII: Precautions for Handling and Use/Control Measures

Customary personal hygiene measures such as washing hands after working with fabrics are recommended. Adequate ventilation is recommended in the work area. Avoid breathing any dust that may evolve during processing. Some individuals have been known to have allergic reactions when prolonged contact is made with certain fabrics. Such individuals may wear gloves when handling fabric in order to avoid direct skin contact.

Section VIII: Emergency and First Aid

No health problems are anticipated from exposure to this product under normal conditions. However, should exposure result in skin, eye or other irritation, the individual should be removed from the area of exposure and provided the proper medical attention.

Section IX: Transportation Information

DOT Proper Shipping Name: Not regulated.
DOT Identification Number: N/A
DOT Hazard Class: N/A
DOT Packaging Group: N/A

Section X: Regulatory Information

SARA Title III Section 311/312 Hazard Category: Not hazardous
SARA Section 313 Toxic Chemicals: None known.
Section 302 Extremely Hazardous Substances: None known.
CERCLA Reportable Quantity: None.
California Proposition 65: Carcinogens – per state of California regulations- None known to be present or none in reportable amounts for occupational exposure as per OSHA's approval of the California Hazard Communication Standard, Federal Register, page 31159 ff, 6 June 1997.

Chemicals that may cause birth defects – per state of California regulations- None known to be present or none in reportable amounts for occupational exposure as per OSHA's approval of the California Hazard Communication Standard, Federal Register, page 31159 ff, 6 June 1997.
RCRA Status: If discarded in its purchased form, this product would not be a hazardous waste either by listing or by characteristic. However, under RCRA, it is the responsibility of the product user to determine at the time of disposal, whether a material containing the product or derived from the product should be classified as a hazardous waste. (40 CFR 261.20-24)

Disclaimer

The information contained herein is, to the best of knowledge and belief, accurate. Since the conditions of handling and use are beyond our control, Tietex International, Ltd. assumes no liability regarding the use of the product represented in this MSDS and makes no guarantees of results. It is the responsibility of the user to comply with all applicable federal, state, and local laws and regulations.

Prepared by: Tricia Guzman
Plant Chemist/Environmental Manager
(864) 574-9434

Tietex International, Ltd.

Product Description Sheet

Finished Fabric Style:	T325	**Base Fabric Style:**	T324
Date of Issue:	30-Sep-10	**Revision Level:**	2

Material Properties

Base Fabric	100% Polyester
Finished Fabric Content	

Finish Type

None

Finished Weight
oz/ yard sq

Minimum	Target	Maximum
2.47 oz	2.75 oz	3.02 oz

Product Width(s):
(inches)

40 in.	50 in.
83 in.	

Tests	Methods	Average Typical Properties
Thickness	ASTM D1777	0.02
Tensile Strength	ASTM D5034	Warp: 38 lbs Weft: 43 lbs
Tongue Tear	ASTM D2261	
Trapezoid Tear	ASTM D3787	Warp: 10.22 lbs WEFT 19.1 lbs
Elongation at Max Load	ASTM D5034	WARP 22.44% WEFT 78.9%
Char Strength	Tietex Method	
Char Elongation	Tietex Method	
Seam Slippage	ASTM D4034	
Vertical Burn Rating (avg)	Tietex Method	
Vertical Burn Rating Hi temp (avg)	Tietex Method	

The values in the "Average Typical Properties" column are not the official specifications for this product. They are the results of the Internal testing and product qualification process of Tietex International, Ltd. Individual product specifications and their tolerances can be requested and will be provided separately.

SAFETY DATA SHEET

1. Identification

Product identifier **USG Levelrock® Brand 2500 Floor Underlayment**

Other means of identification

SDS number 57000010003

Additional Products USG Levelrock® Brand 2500 FR Floor Underlayment, USG Levelrock® Brand 2500 Green Floor Underlayment, USG Levelrock® Brand 2500 Green FR Floor Underlayment

Synonyms Poured Gypsum Flooring Underlayment

Recommended use Interior use.

Recommended restrictions Use in accordance with manufacturer's recommendations.

Manufacturer/Importer/Supplier/Distributor information

Company name United States Gypsum Company

Address 550 West Adams Street
Chicago, Illinois 60661-3637

Telephone 1-800-874-4968

Website www.usg.com

Emergency phone number 1-800-507-8899

2. Hazard(s) identification

Physical hazards Not classified.

Health hazards

Skin corrosion/irritation	Category 2
Serious eye damage/eye irritation	Category 1
Sensitization, skin	Category 1
Carcinogenicity	Category 1A

OSHA defined hazards Not classified.

Label elements

Signal word Danger

Hazard statement Causes skin irritation. Causes serious eye damage. May cause an allergic skin reaction. May cause cancer.

Precautionary statement

Prevention Obtain special instructions before use. Do not handle until all safety precautions have been read and understood. Avoid breathing dust. Wash thoroughly after handling. Contaminated work clothing must not be allowed out of the workplace. Wear protective gloves/protective clothing/eye protection/face protection.

Response If exposed or concerned: Call a poison center/doctor. If on skin: Wash with plenty of water. If skin irritation or rash occurs: Get medical advice/attention. Take off contaminated clothing and wash before reuse. If in eyes: Rinse cautiously with water for several minutes. Remove contact lenses, if present and easy to do. Continue rinsing. Immediately call a poison center/doctor.

Storage Store locked up.

Disposal Dispose of contents/container in accordance with local/regional/national/international regulations.

Hazard(s) not otherwise classified (HNOC) None known.

Supplemental information Not applicable.

3. Composition/information on ingredients

Mixtures

Chemical name	CAS number	%
Calcium sulfate hemihydrate	26499-65-0	> 90
Portland Cement	65997-15-1	< 10

Impurities

Chemical name	CAS number	%
Crystalline silica (Quartz)	14808-60-7	< 1

Composition comments

All concentrations are in percent by weight.

Raw materials in this product contain respirable crystalline silica as an impurity. The weight percent of respirable crystalline silica found in this product is < 1%. Exposures to respirable crystalline silica during the normal use of this product must be determined by workplace hygiene testing.

4. First-aid measures

Inhalation

Dust irritates the respiratory system, and may cause coughing and difficulties in breathing. Move injured person into fresh air and keep person calm under observation. Get medical attention if symptoms persist.

Skin contact

Contact with wet or dry product: Wash area with cold running water immediately. Open sores or cuts should be thoroughly flushed and covered with suitable dressings.

Eye contact

Dust in eyes: Flush with cold tap water for at least 15 minutes. If irritation persists, seek medical attention immediately.

Ingestion

Calcium sulfate hemihydrate hardens and if ingested may result in stomach and intestinal blockage. Drinking gelatin solutions or large volumes of water may delay setting. Get medical attention if symptoms occur.

Most important symptoms/effects, acute and delayed

Dust may irritate throat and respiratory system and cause coughing. May cause serious chemical burns to the skin. May cause chemical eye burns. Permanent eye damage including blindness could result.

Indication of immediate medical attention and special treatment needed

Provide general supportive measures and treat symptomatically.

General information

Ensure that medical personnel are aware of the material(s) involved.

5. Fire-fighting measures

Suitable extinguishing media

Use fire-extinguishing media appropriate for surrounding materials.

Unsuitable extinguishing media

Not applicable.

Specific hazards arising from the chemical

Not a fire hazard.

Special protective equipment and precautions for firefighters

Selection of respiratory protection for firefighting: follow the general fire precautions indicated in the workplace. Self-contained breathing apparatus and full protective clothing must be worn in case of fire.

Fire fighting equipment/instructions

Use standard firefighting procedures and consider the hazards of other involved materials.

Specific methods

Cool material exposed to heat with water spray and remove it if no risk is involved.

6. Accidental release measures

Personal precautions, protective equipment and emergency procedures

Use a NIOSH/MSHA approved respirator if there is a risk of exposure to dust/fume at levels exceeding the exposure limits. See Section 8 of the SDS for Personal Protective Equipment.

Methods and materials for containment and cleaning up

Vacuum up the spilled material. Vacuums used for this purpose should be equipped with HEPA filters. Containers must be labeled. Collect in approved containers and seal securely. For waste disposal, see Section 13 of the SDS.

Environmental precautions

Avoid discharge to drains, sewers, and other water systems.

7. Handling and storage

Precautions for safe handling

Wear appropriate personal protective equipment (See Section 8). Do not get in eyes and avoid contact with skin and clothing. Avoid inhalation of dust. Minimize dust production when mixing, or opening and closing bags. Use with adequate dust control and local ventilation. Wear appropriate NIOSH respirator when ventilation is inadequate and occupational exposure limits are exceeded. Wash hands thoroughly after handling. Use a non-alkaline soap such as Neutralite Safety Solution or Mason's Hand Rinse.

Conditions for safe storage, including any incompatibilities

Store in a cool, dry, well-ventilated place. Store away from incompatible materials. Avoid contact with acids, water, and moisture.

8. Exposure controls/personal protection

Occupational exposure limits

US. OSHA Specifically Regulated Substances (29 CFR 1910.1001-1053)

Impurities	Type	Value
Crystalline silica (Quartz) (CAS 14808-60-7)	TWA	0.05 mg/m3

US. OSHA Table Z-1 Limits for Air Contaminants (29 CFR 1910.1000)

Components	Type	Value	Form
Calcium sulfate hemihydrate (CAS 26499-65-0)	PEL	5 mg/m3	Respirable fraction.
		15 mg/m3	Total dust.
Portland Cement (CAS 65997-15-1)	PEL	5 mg/m3	Respirable fraction.
		15 mg/m3	Total dust.

US. OSHA Table Z-3 (29 CFR 1910.1000)

Components	Type	Value
Portland Cement (CAS 65997-15-1)	TWA	50 mppcf

Impurities	Type	Value	Form
Crystalline silica (Quartz) (CAS 14808-60-7)	TWA	0.1 mg/m3	Respirable.
		2.4 mppcf	Respirable.

US. ACGIH Threshold Limit Values

Components	Type	Value	Form
Calcium sulfate hemihydrate (CAS 26499-65-0)	TWA	10 mg/m3	Inhalable fraction.
Portland Cement (CAS 65997-15-1)	TWA	1 mg/m3	Respirable fraction.

Impurities	Type	Value	Form
Crystalline silica (Quartz) (CAS 14808-60-7)	TWA	0.025 mg/m3	Respirable fraction.

US. NIOSH: Pocket Guide to Chemical Hazards

Components	Type	Value	Form
Calcium sulfate hemihydrate (CAS 26499-65-0)	TWA	5 mg/m3	Respirable.
		10 mg/m3	Total
Portland Cement (CAS 65997-15-1)	TWA	5 mg/m3	Respirable.
		10 mg/m3	Total

Impurities	Type	Value	Form
Crystalline silica (Quartz) (CAS 14808-60-7)	TWA	0.05 mg/m3	Respirable dust.

Biological limit values	No biological exposure limits noted for the ingredient(s).
Appropriate engineering controls	Provide sufficient ventilation for operations causing dust formation. Observe occupational exposure limits and minimize the risk of exposure.

Individual protection measures, such as personal protective equipment

Eye/face protection	Wear approved safety goggles.
Skin protection	
Hand protection	Wear appropriate chemical resistant gloves.
Skin protection	
Other	Wear long-sleeved shirts, pants and rubber boots.
Respiratory protection	If engineering controls do not maintain airborne concentrations below recommended exposure limits (where applicable) or to an acceptable level (in countries where exposure limits have not been established), an approved respirator must be worn. Use a NIOSH/MSHA approved respirator if there is a risk of exposure to dust/fume at levels exceeding the exposure limits. Use a NIOSH/MSHA approved air purifying respirator as needed to control exposure. Consult with respirator manufacturer to determine respirator selection, use, and limitations. Use positive pressure, air-supplied respirator for uncontrolled releases or when air purifying respirator limitations may be exceeded. Follow respirator protection program requirements (OSHA 1910.134 and ANSI Z88.2) for all respirator use.
Thermal hazards	None.
General hygiene considerations	During work avoid kneeling in fresh mortar or concrete wherever possible. If kneeling is absolutely necessary, then appropriate waterproof personal protective equipment must be worn. Do not eat, drink or smoke when working with cement to avoid contact with skin or mouth. Immediately after working with cement or cement-containing materials, workers should wash or shower. Remove contaminated clothing, footwear, watches, etc, and clean thoroughly before re-use.

9. Physical and chemical properties

Appearance	
Physical state	Solid.
Form	Powder.
Color	Gray to off-white.
Odor	Low to no odor.
Odor threshold	Not applicable.
pH	11 - 13
Melting point/freezing point	Not applicable.
Initial boiling point and boiling range	Not applicable.
Flash point	Not applicable.
Evaporation rate	Not applicable.
Flammability (solid, gas)	Not applicable.
Upper/lower flammability or explosive limits	
Flammability limit - lower (%)	Not applicable.
Flammability limit - upper (%)	Not applicable.
Explosive limit - lower (%)	Not applicable.
Explosive limit - upper (%)	Not applicable.
Vapor pressure	Not applicable.
Vapor density	Not applicable.
Relative density	2.9 - 3.2 (H20 = 1)
Solubility(ies)	
Solubility (water)	0.1 - 1 g/100g (in water)
Partition coefficient (n-octanol/water)	Not applicable.
Auto-ignition temperature	Not applicable.
Decomposition temperature	Not applicable.

Viscosity	Not applicable.
Other Information	
Flammability	Not applicable.
VOC	0 g/l

10. Stability and reactivity

Reactivity	The product is stable and non reactive under normal conditions of storage and transport.
Chemical stability	Material is stable under normal conditions.
Possibility of hazardous reactions	Hazardous polymerization does not occur.
Conditions to avoid	Contact with incompatible materials. Exposure to moisture. When mixed with water this product can become very hot. Encasing or making moulds of any body part can cause serious burns that may require surgical removal of affected tissue and even amputation of encased body part.
Incompatible materials	Acids. Crystalline silica in contact with powerful oxidizing agents, such as fluorine, chlorine trifluoride and oxygen difluoride, may cause fires. Crystalline silica will dissolve in hydrofluoric acid and produce a corrosive gas, silicon tetrafluoride.
Hazardous decomposition products	Calcium oxides. Sulfur oxides.

11. Toxicological information

Information on likely routes of exposure

Inhalation	Inhalation of dusts may cause respiratory irritation. Prolonged and repeated exposure to airborne respirable crystalline silica can cause silicosis and/or lung cancer.
Skin contact	Exposure to dry product may cause drying of the skin and mild irritation, or more significant effects from the aggravation of other conditions. Wet product is caustic (pH ≥ 12) and dermal exposure may cause more severe skin effects, including thickening, cracking or fissuring of the skin. Prolonged exposure can cause severe skin damage in the form of chemical (caustic) burns. Some individuals who are exposed to wet or dry product may exhibit an allergic response, which can result in symptoms ranging from mild rashes to severe skin ulcers.
Eye contact	Exposure to airborne dust may cause immediate or delayed irritation of the eyes. Depending on the level of exposure, effects may range from redness to chemical burns and blindness.
Ingestion	Ingestion may cause irritation and stomach discomfort.
Symptoms related to the physical, chemical and toxicological characteristics	Dust may irritate throat and respiratory system and cause coughing. May cause serious chemical burns to the skin. May cause chemical eye burns. Permanent eye damage including blindness could result.

Information on toxicological effects

Acute toxicity	Not expected to be a hazard under normal conditions of intended use.
Skin corrosion/irritation	Causes skin irritation.
Serious eye damage/eye irritation	Causes serious eye damage.
Respiratory or skin sensitization	
Respiratory sensitization	Not classified but possible due to skin sensitization effect.
Skin sensitization	Trace amounts of Cr(VI) compounds from Portland Cement may cause allergic skin reaction even after one exposure.
Germ cell mutagenicity	No data available to indicate product or any components present at greater than 0.1% are mutagenic or genotoxic.
Carcinogenicity	Repeated and prolonged exposures to high levels of respirable crystalline silica may cause cancer.

IARC Monographs. Overall Evaluation of Carcinogenicity

Crystalline silica (Quartz) (CAS 14808-60-7)	1 Carcinogenic to humans.

NTP Report on Carcinogens

Crystalline silica (Quartz) (CAS 14808-60-7)	Known To Be Human Carcinogen.

OSHA Specifically Regulated Substances (29 CFR 1910.1001-1053)

Crystalline silica (Quartz) (CAS 14808-60-7)	Cancer

Reproductive toxicity	Not expected to be a reproductive hazard.
Specific target organ toxicity - single exposure	No data available, but none expected.

Specific target organ toxicity - repeated exposure Not classified. For detailed information, see section 16.

Aspiration hazard Due to the physical form of the product it is not an aspiration hazard.

Chronic effects Prolonged and routine inhalation of high levels of respirable crystalline silica particles can lead to the lung disease known as silicosis. Some studies show excess numbers of cases of scleroderma, connective tissue disorders, lupus, rheumatoid arthritis, chronic kidney diseases and end-stage kidney disease in workers exposed to respirable crystalline silica. Pre-existing skin and respiratory conditions including dermatitis, asthma and chronic lung disease might be aggravated by exposure. Occupational exposure to respirable dust and respirable crystalline silica should be monitored and controlled. May cause eczema-like skin disorders (dermatitis).

12. Ecological information

Ecotoxicity The product is not expected to be hazardous to the environment. Large amounts of the product may affect the pH-factor in water with possible risk of harmful effects to aquatic organisms.

Components		Species	Test Results
Calcium sulfate hemihydrate (CAS 26499-65-0)			
Aquatic			
Fish	LC50	Fathead minnow (Pimephales promelas)	> 1970 mg/l, 96 hours

Persistence and degradability No data available.

Bioaccumulative potential Bioaccumulation is not expected.

Mobility in soil No data available.

Other adverse effects None expected.

13. Disposal considerations

Disposal instructions Dispose in accordance with applicable federal, state, and local regulations. Recycle responsibly.

Local disposal regulations Dispose of in accordance with local regulations.

Hazardous waste code The waste code should be assigned in discussion between the user, the producer and the waste disposal company.

Waste from residues / unused products Dispose of in accordance with local regulations.

Contaminated packaging Dispose of in accordance with local regulations.

14. Transport information

DOT

Not regulated as dangerous goods.

IATA

Not regulated as dangerous goods.

IMDG

Not regulated as dangerous goods.

Transport in bulk according to Annex II of MARPOL 73/78 and the IBC Code Not applicable.

15. Regulatory information

US federal regulations This product is a "Hazardous Chemical" as defined by the OSHA Hazard Communication Standard, 29 CFR 1910.1200.

TSCA Section 12(b) Export Notification (40 CFR 707, Subpt. D)

Not regulated.

CERCLA Hazardous Substance List (40 CFR 302.4)

Not listed.

SARA 304 Emergency release notification

Not regulated.

OSHA Specifically Regulated Substances (29 CFR 1910.1001-1053)

Crystalline silica (Quartz) (CAS 14808-60-7) Cancer
lung effects
immune system effects
kidney effects

Superfund Amendments and Reauthorization Act of 1986 (SARA)

SARA 302 Extremely hazardous substance

Not listed.

SARA 311/312 Hazardous chemical	Yes
Classified hazard categories	Skin corrosion or irritation Serious eye damage or eye irritation Respiratory or skin sensitization Carcinogenicity

SARA 313 (TRI reporting)

Not regulated.

Other federal regulations

Clean Air Act (CAA) Section 112 Hazardous Air Pollutants (HAPs) List

Not regulated.

Clean Air Act (CAA) Section 112(r) Accidental Release Prevention (40 CFR 68.130)

Not regulated.

Safe Drinking Water Act (SDWA)	Not regulated.

US state regulations

US. Massachusetts RTK - Substance List

Calcium sulfate hemihydrate (CAS 26499-65-0)
Crystalline silica (Quartz) (CAS 14808-60-7)
Portland Cement (CAS 65997-15-1)

US. New Jersey Worker and Community Right-to-Know Act

Calcium sulfate hemihydrate (CAS 26499-65-0)
Crystalline silica (Quartz) (CAS 14808-60-7)
Portland Cement (CAS 65997-15-1)

US. Pennsylvania Worker and Community Right-to-Know Law

Calcium sulfate hemihydrate (CAS 26499-65-0)
Crystalline silica (Quartz) (CAS 14808-60-7)
Portland Cement (CAS 65997-15-1)

US. Rhode Island RTK

Crystalline silica (Quartz) (CAS 14808-60-7)
Portland Cement (CAS 65997-15-1)

California Proposition 65

WARNING: This product can expose you to Crystalline silica (Quartz), which is known to the State of California to cause cancer. For more information go to www.P65Warnings.ca.gov.

California Proposition 65 - CRT: Listed date/Carcinogenic substance

Crystalline silica (Quartz) (CAS 14808-60-7) Listed: October 1, 1988

US. California. Candidate Chemicals List. Safer Consumer Products Regulations (Cal. Code Regs, tit. 22, 69502.3, subd. (a))

Crystalline silica (Quartz) (CAS 14808-60-7)

International Inventories

Country(s) or region	Inventory name	On inventory (yes/no)*
United States & Puerto Rico	Toxic Substances Control Act (TSCA) Inventory	Yes

*A "Yes" indicates this product complies with the inventory requirements administered by the governing country(s).
A "No" indicates that one or more components of the product are not listed or exempt from listing on the inventory administered by the governing country(s).

16. Other information, including date of preparation or last revision

Issue date	07-May-2015
Revision date	30-October-2018
Version #	02

Further information

Crystalline silica: Raw materials in this product contain respirable crystalline silica as an impurity. Exposures to respirable crystalline silica are not expected during the normal use of this product. However, actual levels must be determined by workplace hygiene testing. Prolonged and repeated exposure to airborne free respirable crystalline silica can result in lung disease (i.e., silicosis) and/or lung cancer.

Calcium sulfate hemihydrate: Is classified as a hazardous substance but is generally considered a safe material for routine use. When Calcium sulfate hemihydrate is used responsibly it is not considered as a dangerous material. However, when mixed with water this product can become very hot. DO NOT attempt to make a cast enclosing any part of the body. Encasing any body part can cause serious burns and even amputation of the encased body part.

OSHA's "Preventing Skin Problems from Working with Portland Cement" provides excellent guidance and can be downloaded at: https://www.osha.gov/dsg/guidance/cement-guidance.html

NFPA Ratings:
Health: 2
Flammability: 0
Physical hazard: 0

Hazard Scale: 0 = Minimal 1 = Slight 2 = Moderate 3 = Serious 4 = Severe

NFPA ratings

Disclaimer

This information is provided without warranty. The information is believed to be correct. This information should be used to make an independent determination of the methods to safeguard workers and the environment.

SAFETY DATA SHEET

SECTION 1: PRODUCT AND COMPANY IDENTIFICATION

Product: **BEM**
Part Number: **6507128**
Manufacturer: **W. R. Meadows®, Inc.**
Address: 300 Industrial Drive
Hampshire, Illinois 60140
Telephone: (847) 214-2100
In case of emergency, dial (800) 424-9300 (CHEMTREC)
Revision Date: 9/27/2021
Product Use: Moisture Cure Sealant

SECTION 2: HAZARDS IDENTIFICATION/EXPOSURE LIMITS

HMIS		HAZARD STATEMENTS
|Health|	|1|	**WARNING!**
|Flammability|	|0|	Causes skin irritation. **(Category 2)**
|Reactivity|	|0|	Harmful if inhaled. **(Category 4)**
|Personal Protection|	| |	Causes eye irritatiion. **(Category 2B)**
		PRECAUTIONARY STATEMENTS
		Avoid direct contact.

SECTION 3: HAZARDS COMPONENTS

Chemical Name:	CAS Number	% by Weight	SARA 313	Vapor Pressure (mm Hg@20°C)	LEL (@24°C)	
1. Petroleum Asphalt	8052-42-4	Proprietary	No	N/A	NA	
2. Amino Silane	1760-24-3	1-5	No	N/A	NA	*N/A = Not Applicable*

Under the reporting requirements of Section 313 of Title III of the Superfund Amendments and Reauthorization Act of 1986 (SARA) and 40 CFR Part 372, chemicals listed on the 313 List (40 CFR Part 373.65) are identified under the heading "SARA 313."

SECTION 4: EMERGENCY AND FIRST AID PROCEDURES

EYE CONTACT: If irritation or redness develops, move victim away from exposure source and into fresh air. Flush eyes with water for fifteen (15) minutes. If symptoms persist, seek medical attention.
SKIN CONTACT: Wash affected area(s) with ethyl alcohol, then wash with soap and water.
INHALATION: An unlikely exposure route. If symptoms develop seek medical attention.
INGESTION: An unlikely route of exposure. If ingested consult a physician or poison control center.
MOST IMPORTANT SYMPTOMS/EFFECTS, ACUTE AND CHRONIC: See Section Eleven for Symptoms/Effects.

SECTION 5: FIRE AND EXPLOSIVES HAZARDS

FLASHPOINT: Not applicable.
EXTINGUISHING MEDIA: Use water fog, foam, dry chemicals, or carbon dioxide.
CHEMICAL/COMBUSTION HAZARDS: Thermal decomposition may produce carbon monoxide, carbon dioxide, sulfur oxides, hydrogen sulfide, and incomplete combustion products.
PRECAUTIONS/PERSONAL PROTECTIVE EQUIPMENT: Containers exposed to intense heat from fires should be cooled water to prevent vapor pressure build-up, which could result in container rupture. Fire responders should wear full protective equipment, including a self-contained breathing apparatus.

SECTION 6: ACCIDENTAL RELEASE MEASURES

SPILL OR LEAK PROCEDURES: LARGE SPILLS>>Evacuate the hazard area of unprotected personnel. Wear appropriate respirator and protective clothing. Shut off source of leak only if safe to do so. Dike and contain. If vapor cloud forms, water fog may be used to suppress. Contain run-off. Remove with vacuum trucks or pump to storage/salvage vessels. Soak up residue with an absorbent, such as clay, sand, or other suitable material. Place in non-leaking containers for proper disposal. Flush area with water to remove trace residue. Dispose of flush solutions as above. SMALL SPILLS>>Take up with an absorbent material and place in non-leaking containers. Seal tightly for proper disposal.

SECTION 7: HANDLING AND STORAGE

SAFE HANDLING PROCEDURES: Avoid direct contact. Use appropriate personal protective equipment.
SAFE STORAGE: Store in cool, dry location. Avoid sources of moisture.

SAFETY DATA SHEET

SECTION 8: EXPOSURE CONTROLS/PERSONAL PROTECTION

ENGINEERING CONTROLS: None normally required
PERSONAL PROTECTIVE EQUIPMENT: Wear safety glasses/goggles and chemical-resistant gloves. Respiratory protection is not normally required. Avoid direct contact.

SECTION 9: PHYSICAL AND CHEMICAL PROPERTIES

BOILING POINT: N/E	**VAPOR DENSITY:** >1 (AIR = 1)	**% VOLATILE BY VOLUME:** N/E (Theoretical)
EVAPORATION RATE: N/E	**pH LEVEL:** N/A	**% VOLATILE BY WEIGHT:** N/E (Theoretical)
WEIGHT PER GALLON: 10.80 (Theoretical)	**PRODUCT APPEARANCE:** Brown Paste	**VOC CONTENT:** 26 g/L
ODOR: None	**ODOR THRESHOLD:** N/D	**MELTING/FREEZING POINT:** N/D
FLASH POINT: See Section 5	**FLAMMABILITY:** N/D	**UEL/LEL:** N/D
VAPOR PRESSURE: N/D	**RELATIVE DENSITY:** N/D	**SOLUBILITY:** N/D
PARTITION COEFFICENT: N/D	**AUTOIGNITION TEMPERATURE:** N/D	**DECOMPOSITION TEMPERATURE:** N/D
VISCOSITY: N/D	*N/A = Not Applicable*	*N/D = Not Determined* *N/E = Not Established*

SECTION 10: STABILITY/REACTIVITY

STABILITY: Stable. **HAZARDOUS POLYMERIZATION:** Will not occur.
CONDITIONS AND MATERIALS TO AVOID: Avoid oxidizing materials and moisture.
HAZARDOUS DECOMPOSITION PRODUCTS: None known.

SECTION 11: TOXICOLOGICAL INFORMATION

EYE CONTACT: Based on the presence of component 2, this product may cause severe eye irritation and corneal injury.
SKIN CONTACT: Exposure may cause mild skin irritation. Prolonged or repeated contact may cause redness, drying, and cracking of the skin. Persons with pre-existing skin disorders may be more susceptible to the effects of this material. Based on the presence of components 1 and 2, prolonged or repeated contact may result in defatting and drying of the skin, which may result in dermatitis.
INHALATION: This is not anticipated to be an exposure pathway due to low product volatility.
INGESTION: Ingestion may cause irritation of the gastrointestinal tract and/or ulceration/burns in the throat and mouth. Based on the presence of component 2, ingestion may result in nausea, vomiting, diarrhea, and restlessness.
SIGNS AND SYMPTOMS: Symptoms of eye irritation include pain, tearing, and swelling. Symptoms of skin irritation include reddening, swelling, and rash. Symptoms or respiratory irritation include runny nose, sore throat, abdominal pain, nausea, vomiting, and diarrhea.
AGGRAVATED MEDICAL CONDITIONS: Pre-existing skin, eye, and respiratory disorders may be aggravated by exposure to this product.
OTHER HEALTH EFFECTS: From skin painting studies in laboratory animals, it has been concluded that some asphalts may possess weak carcinogenic activity. This means that workers who practice poor personal hygiene, and who are repeatedly exposed by direct skin contact with petroleum asphalt over many years, may potentially be at risk of developing skin cancer. Intermittent or occasional skin contact with petroleum asphalt is not expected to have serious health effects as long as good personal hygiene measures, such as those outlined in this safety data sheet, are followed. In addition, asphalt vapors may contain polycyclic aromatic hydrocarbons, some of which are known to be carcinogenic.

SECTION 12: ECOLOGICAL INFORMATION

ECOTOXICITY: N/A	**DEGRADABILITY:** N/A	**BIOACCUMULATIVE POTENTIAL:** N/A
SOIL MOBILITY: N/A	**OTHER ADVERSE EFFECTS:** N/A	*N/A = Not Applicable*

SECTION 13: WASTE DISPOSAL INFORMATION

WASTE DISPOSAL INFORMATION: Observe all federal, state, and local regulations regarding proper disposal.

SECTION 14: TRANSPORTATION INFORMATION

HAZARDOUS/NON-HAZARDOUS MATERIAL: Not regulated by DOT.
UN NUMBER: None. **HAZARD CLASS:** None. **PACKING GROUP:** N/A
UN PROPER SHIPPING NAME: N/A
ENVIRONMENTAL HAZARDS: None recognized.
BULK TRANSPORTATION INFORMATION: None.
SPECIAL PRECAUTIONS: None. *N/A = Not Applicable*

SECTION 15: REGULATORY INFORMATION

OTHER REGULATORY CONSIDERATIONS: None recognized.

SECTION 16: OTHER INFORMATION

PREPARATION DATE: 1/21/2019
PREPARED BY: Dave Carey

The information contained herein is based on the data available to us and is believed to be correct. However, we make no warranty, expressed or implied regarding the accuracy of this data or the results to be obtained from the use thereof. We assume no responsibility for injury from the use of this product described herein.

MasterFormat: 07 14 16

JULY 2022
(Supersedes July 2020)

HYDRALASTIC™ 836 SL

Cold-Applied, Moisture Cured, Waterproofing Membrane

DESCRIPTION

HYDRALASTIC 836 SL is a two-component, cold-applied, high solids, water-activated, waterproofing system. The product is designed for horizontal and vertical surfaces. It does not shrink, has a low volatile organic compound (VOC) content. It will not crack in extreme cold or flow due to softening at high temperatures.

USES

HYDRALASTIC 836 SL is suitable for use on interior or exterior concrete surfaces, where protection from water intrusion is desired. The product can be used for both above-grade and below-grade applications. HYDRALASTIC 836 SL is excellent for horizontal and vertical applications, such as waterproofing plaza decks and elevated composite decks and also in between-slab (split-slab) applications.

FEATURES/BENEFITS

- Fast curing at 75° F (23° C); no dust pick-up.
- Save time and labor; easy self-leveling application.
- Decreased blistering.
- May be applied to green concrete
- Fast cure; reduces labor.
- Cured with water addition in as little as two hours/Can be recoated same day for two-coat application.
- Will not harm EPS or Styrofoam materials.
- Does not freeze; will not be damaged due to freezing weather conditions.
- Cures to a tough, flexible membrane.
- Easy to mix; add up to one quart (0.95 L) water per five gal. (18.9 L)

PACKAGING

5 Gal. (18.93 L) Pails.

COVERAGE

Approximate coverage per gallon (3.78 L):

26 ft.^{2} (2.4 m^2)	60 mils (dry)
17.5 ft.^{2} (1.6 m^2)	90 mils (dry)
13 ft.^{2} (1.2 m^2)	120 mils (dry)

SHELF LIFE

When stored indoors in original, unopened containers at temperatures between 40° - 70° F (4° - 21° C), optimum performance and best use is obtained within one year of date of manufacture.

SPECIFICATIONS/STANDARDS

- ASTM C836
- Complies with all current federal, state, and local maximum allowable VOC requirements, including National EPA VOC Emission Standard for Architectural Coatings, Arizona Maricopa County, CARB, Colorado AIM, LADCO, OTC Phase I and II, SCAQMD, and Utah Department of Air Quality.

CONTINUED ON REVERSE SIDE …

W. R. MEADOWS, INC.
P.O. Box 338 • HAMPSHIRE, IL 60140-0338
Phone: 847/214-2100 • Fax: 847/683-4544
1-800-342-5976
www.wrmeadows.com • info@wrmeadows.com

HAMPSHIRE, IL / CARTERSVILLE, GA / YORK, PA
FORT WORTH, TX / BENICIA, CA / POMONA, CA
GOODYEAR, AZ / MILTON, ON / SHERWOOD PARK, AB

TECHNICAL DATA (continued)

PROPERTY	TYPICAL TEST VALUE	TEST METHOD
Solids Content by Weight, %:	96 ± 3	ASTM C2369
Initial Viscosity	2,000 ± 1000 cps	
Viscosity after 20 mins mixed with potable water.	20,000 ± 1000 cps	
Working Time with addition of potable water	20 minutes at 75° F (23.9° C) and 50% RH	
Initial Cure with the addition of 1 quart of potable water to 5 gal. HYDRALASTIC 836 SL	2 Hours at 75° F (23.9° C) and 50% RH	
Tensile Strength, psi:	350 ± 50 psi	ASTM D412
Elongation at Break, %:	500 ± 50 %	ASTM D412
Permeability, perm in.:	<1.5	ASTM E96 BW
Shore 00 Hardness:	>76	ASTM D2240
Service Temperature, ° F (° C):	-40° - 200° (-40° - 70°)	
Minimum Application Temperature, ° F (° C):	Above 30° (-1°) and rising	
VOC Content, g/L:	47	ASTM D2369

APPLICATION

New Concrete ... For best results, all new concrete surfaces should be given a light trowel finish or screed to provide a flat, uniform surface. The surface should then be finished with a light broom profile. Wet curing is recommended. All membrane curing compounds must be mechanically removed. New concrete should be power washed or blown clean with oil-free compressed air before coating application to ensure removal any dirt build or contaminates that may interfere with bond of primer or HYDRALASTIC 836 SL.

Surface Preparation ... HYDRALASTIC 836 SL is intended for concrete, metal, and wood surfaces. For existing concrete remedial work or new concrete lacking profile, lightly roughen or rough grind substrate. Concrete surfaces require a finish equal to or greater than ICRI CSP #3. Surface preparation may be completed by shot blasting. Install a 100 - 200 ft.^{2} (9.30 - 18.58 m^2) mockup of the system to be installed and approved for actual coverage rates and functionality before proceeding.

The concrete must be structural sound and free of all contaminates, including oil, grease, dust, laitance and other bond-breaking materials. Mechanically abrade the concrete surface by grinding, abrasive blasting, or shot blasting to ICRI Guideline No. 310.2R, CSP 3 - 5.

All surfaces must be thoroughly dry, not damp, and have no standing water to ensure proper performance of the HYDRALASTIC 836 SL system.

For metal surfaces, remove all oils or other contaminants on the surface prior to application of HYDRALASTIC 836 SL. All metal substrates must be primed. Mechanically abrade and solvent wipe to remove any contaminates. Allow the solvent to evaporate completely prior to application of HYDRALASTIC 836 SL.

Joints, Cracks, and Flashing ... Apply a stripe coat of HYDRALASTIC 836 SL over all cracks up to 1/16" (1.58 mm) width. All cracks over 1/16" (1.58 mm) width must be caulked. All detailing must be covered within 48 hours at 75° F (23° C) with the full application of the HYDRALASTIC 836 SL waterproofing.

Priming ... For porous substrates and where air and/or moisture release may cause pinhole or blister problems to occur in the applied membrane, priming the substrate prior to application of HYDRALASTIC 836 SL is recommended. Discovery of these issues is generally revealed in the mockup. For priming recommendations and installation, refer to the Priming Installation Guideline provided at www.wrmeadows.com.

Decrease Blistering ... This is a water-activated waterproofing compound; as such, water is required for proper curing. The waterproofing membrane should be properly mixed with water to achieve optimal performance. Add up to one quart (0.95 L) of potable water per five gal. (18.9 L) pail of HYDRALASTIC 836 SL. Applying HYDRALASTIC 836 SL in the cooling/declining temperature part of the day or not in direct sunlight will decrease probability of blistering due to outgassing from the concrete and/or also due to surface sealing rapidly, trapping vapor/moisture in the material. Do not apply when the surface temperature of the substrate is greater than 90° F (32° C).

Mixing ... Mix ratio: 20 parts HYDRALASTIC 836 SL to one part water by volume. HYDRALASTIC 836 should be thoroughly mixed before adding water. Add one quart (0.95 L) of water to five gallons (18.9 L) of HYDRALASTIC 836 SL and mix thoroughly for three minutes using a mechanical mixer at slow speed to ensure a homogeneous material. Use a Jiffy mixer designed for paints or coatings, not a mud or mortar mixer. Take care not to allow entrapment of air into the material when mixing and during placement. After mixing, place material on to substrate immediately. Do not allow material to remain in mixing container. Do not mix in an up-and-down manner.

Application Method ... Make sure product is conditioned at 75° F (23.9° C) by storing product overnight or at least 12 hours prior to use for ease of application. Do not store product in the direct sun.

Apply evenly by notched squeegee. A serrated or notched squeegee is suggested for best results. Since HYDRALASTIC 836 SL is deigned to be self-leveling, the material will level behind the notched squeegee to a given thickness depending on amplitude of notch. This helps to ensure uniform coverage, decreased waste, and ease of application. Following application with a notched rubber squeegee, back roll with a short hair nap roller in a cross direction to ensure a uniform surface. HYDRALASTIC 836 SL can also be applied horizontally with a serrated or notched squeegee. Cure time will vary depending on temperature and humidity. Attention to proper slope to drain is essential for proper waterproofing. HYDRALASTIC 836 SL has a work life of 20 minutes at 75° F (23.9° C) with the addition of potable water. Make sure all spreading and finishing of the product has been completed within this timeframe.

In critical waterproofing applications such as plaza decks, podiums, or other similar horizontal waterproofing applications, a 60-mil layer of HYDRALASTIC 836 SL embedded with REINFORCING FABRIC HCR from W. R. MEADOWS is recommended. Keep in mind, the reinforcing fabric must be embedded in the wet HYDRALASTIC 836 SL to ensure proper bond and wetting-out. Typically, this must be completely finished within 20 minutes of initial mixing at 75° F (23° C). For all horizontal installations, refer to High Build Reinforced System installation guidelines provided at www.wrmeadows.com for proper installation guidelines. If there are no details available for your specific application, please contact a W. R. MEADOWS representative for recommendations.

If a second coat is necessary, apply as soon as first coat has set sufficiently to support subsequent coat. Recoat time at 75° F (23.9° C) and 50% relative humidity is 2 - 4 hours before proceeding to subsequent coats, but no more than 24 hours apart. As ambient, substrate, and material temperatures increase, an oily-like film may develop on the surface and act as a bond breaker. For next-day or second-coat applications, rub the tie-in area down [6″ – 8″ (152 – 203 mm wide)] with acetone, mineral spirits, or xylene. This removes the oil film. Do not use alcohol. If more than 48 hours has elapsed at 75° F (23°C), a prime coat of the epoxy primer must be applied per Priming Installation Guideline provided at www.wrmeadows.com. Primer must be completed to ensure inter-coat adhesion.

HYDRALASTIC 836 SL can be applied up to 15 mils in a single vertical application until the minimum 60 mils or project specified mil thickness requirement is achieved.

Protect the Membrane ... Protect HYDRALASTIC 836 SL with MEL-DRAIN™ (type with the polymeric backing film) from W. R. MEADOWS or contact W. R. MEADOWS for additional protection course options. Application of protection should be done after material can be walked on without causing damage to the integrity of the membrane.

HYDRALASTIC 836 SL will not typically wash off if rain begins during or after application. Stop all work if rain begins and protect open or unused material from rainfall.

Cleanup ... Uncured HYDRALASTIC 836 SL cleans up easily with acetone, mineral spirits, or xylene. Cured material is best removed by mechanical means.

PRECAUTIONS

Do not expose product to exterior UV for longer than 14 days. HYDRALASTIC 836 SL is not to be used as a liner in a water-containing structure and is not to be used as an exposed or wearing surface. For this purpose, use the GEMITE® line of products. HYDRALASTIC 836 SL is not compatible with asphalt, polymeric-based products, or asphaltic membranes. Do not use on surfaces that are later to be painted. It cannot withstand direct wear or abrasion. Containers that have been opened must be used as soon as possible. Do not dilute product with solvent under any circumstance. HYDRALASTIC 836 SL is not recommended for use over magnesite, gypsum, lightweight concrete, or where chained or studded tires may be used. Concrete must exhibit 3000 psi (20.7 MPa) minimum strength. Use acetone, mineral spirits, or xylene to remove all grime, oil, paint, frost, and other contamination from all working surfaces. Always install a mockup prior to full installations.

This data sheet provides a summary of the factors, precautions, limitations, and design theories that should be considered when designing a complete waterproofing and drainage system, but is not standalone or complete; project, environmental, and application specific requirements must be considered before drafting a guide specification, determining suitability, or application of material. Suitability of the HYDRALASTIC 836 SL is the sole responsibility of the licensed design professional or installing contractor.

Refer to safety data sheet for health and safety information. WARNING: This product contains isocyanates.

For most current data sheet, LEED information, and SDS, visit www.wrmeadows.com.

GreenLine® By W. R. MEADOWS
Environmentally Responsible Products for Concrete Performance

LIMITED WARRANTY
W. R. MEADOWS, INC. warrants at the time and place we make shipment, our material will be of good quality and will conform with our published specifications in force on the date of acceptance of the order. Read complete warranty. Copy furnished upon request.

Disclaimer
The information contained herein is included for illustrative purposes only, and to the best of our knowledge, is accurate and reliable. W. R. MEADOWS, INC. cannot however under any circumstances make any guarantee of results or assume any obligation or liability in connection with the use of this information. As W. R. MEADOWS, INC. has no control over the use to which others may put its product, it is recommended that the products be tested to determine if suitable for specific application and/or our information is valid in a particular circumstance. Responsibility remains with the architect or engineer, contractor and owner for the design, application and proper installation of each product. Specifier and user shall determine the suitability of products for specific application and assume all responsibilities in connection therewith.

© W. R. MEADOWS 2022

SAFETY DATA SHEET

SECTION 1: PRODUCT AND COMPANY IDENTIFICATION

Product: **Reinforcing Fabric HCR, HD®, NW™** **Part Number: 6062000, 8739500, 8739800**

Manufacturer: **W. R. MEADOWS, INC.** **Address:** 300 Industrial Drive
Hampshire, Illinois 60140

Telephone: (847) 214-2100 In case of emergency, dial (800) 424-9300 (CHEMTREC)

Revision Date: 11/1/2019

Product Use: Reinforcing Fabric

SECTION 2: HAZARDS IDENTIFICATION/EXPOSURE LIMITS

HMIS		
|Health|	|0|	Product is classified as non-hazardous per OSHA 1910.1200. These products are defined by OSHA as an "article." A manufactured item that is formed to a specific shape or design during manufacture that does not release or result in exposure to a hazardous chemical under normal use conditions.
|Flammability|	|0|	
|Reactivity|	|0|	
|Personal Protection|	| |	

SECTION 3: HAZARDS COMPONENTS

Chemical Name:	CAS Number	% by Weight	SARA 313	Vapor Pressure (mm Hg@20°C)	LEL (@24°C)
1. None					

Under the reporting requirements of Section 313 of Title III of the Superfund Amendments and Reauthorization Act of 1966 (SARA) and 40 CFR Part 372, chemicals listed on the 313 List (40 CFR Part 373.65) are identified under the heading "SARA 313."

SECTION 4: EMERGENCY AND FIRST AID PROCEDURES

EYE CONTACT: Not expected to be an exposure route.
SKIN CONTACT: Not Expected to be an exposure route.
INHALATION: Not expected to be an exposure route.
INGESTION: Not expected to be an exposure source.
MOST IMPORTANT SYMPTOMS/EFFECTS, ACUTE AND CHRONIC: See Section Eleven for Symptoms/Effects.

SECTION 5: FIRE AND EXPLOSIVES HAZARDS

FLASHPOINT: Not applicable; product is a solid.
EXTINGUISHING MEDIA: Water fog, foam, dry chemical.
CHEMICAL/COMBUSTION HAZARDS: Carbon monoxide, carbon dioxide, and incomplete combustion products.
PRECAUTIONS/PERSONAL PROTECTIVE EQUIPMENT: Avoid smoke inhalation. Use appropriate respiratory protection.

SECTION 6: ACCIDENTAL RELEASE MEASURES

SPILL OR LEAK PROCEDURES: Not applicable. Product is a solid.

SECTION 7: HANDLING AND STORAGE

SAFE HANDLING PROCEDURES: None.
SAFE STORAGE: Prevent job-site damage.

SECTION 8: EXPOSURE CONTROLS/PERSONAL PROTECTION

	OSHA				ACGIH			
Chemical Name:	PEL	PEL/CEILING	PEL/STEL	SKIN	TLV	TLV/CEILING	TLV/STEL	SKIN
1. None								

ENGINEERING CONTROLS: None required under normal use conditions.
PERSONAL PROTECTIVE EQUIPMENT: None required under normal use conditions.

SECTION 9: PHYSICAL AND CHEMICAL PROPERTIES

BOILING POINT: N/A	**VAPOR DENSITY:** N/A	**% VOLATILE BY VOLUME:** N/A
EVAPORATION RATE: N/A	**pH LEVEL:** N/A	**% VOLATILE BY WEIGHT:** N/A
WEIGHT PER GALLON: N/A	**PRODUCT APPEARANCE:** Fabric Roll	**VOC CONTENT:** N/A
ODOR: None	**ODOR THRESHOLD:** N/D	**MELTING/FREEZING POINT:** N/D
FLASH POINT: See Section 5	**FLAMMABILITY:** N/D	**UEL/LEL:** N/D
VAPOR PRESSURE: N/D	**RELATIVE DENSITY:** N/D	**SOLUBILITY:** N/D
PARTITION COEFFICENT: N/D	**AUTOIGNITION TEMPERATURE:** N/D	**DECOMPOSITION TEMPERATURE:** N/D
VISCOSITY: N/D		*N/D: Not Determined*

SAFETY DATA SHEET

SECTION 10: STABILITY/REACTIVITY

STABILITY: Stable. **HAZARDOUS POLYMERIZATION:** Will not occur.
CONDITIONS AND MATERIALS TO AVOID: None recognized.
HAZARDOUS DECOMPOSITION PRODUCTS: None recognized.

SECTION 11: TOXICOLOGICAL INFORMATION

EYE CONTACT: Not anticipated to be an exposure route.
SKIN CONTACT: Not anticipated to be an exposure route.
INHALATION: Not anticipated to be an exposure route.
INGESTION: Not anticipated to be an exposure route.
SIGNS AND SYMPTOMS: None recognized.
AGGRAVATED MEDICAL CONDITIONS: None recognized.
OTHER HEALTH EFFECTS: None recognized.

SECTION 12: ECOLOGICAL INFORMATION

ECOTOXICITY: N/E **DEGRADABILITY:** N/E **BIOACCUMULATIVE POTENTIAL:** N/E
SOIL MOBILITY: N/E **OTHER ADVERSE EFFECTS:** None Recognized

SECTION 13: WASTE DISPOSAL INFORMATION

WASTE DISPOSAL INFORMATION: Product is classified as a non-hazardous waste.

SECTION 14: TRANSPORTATION INFORMATION

HAZARDOUS/NON-HAZARDOUS MATERIAL: Not regulated by DOT.
UN NUMBER: None. **HAZARD CLASS:** N/A **PACKING GROUP:** N/A
UN PROPER SHIPPING NAME: N/A
ENVIRONMENTAL HAZARDS: None recognized.
BULK TRANSPORTATION INFORMATION: None.
SPECIAL PRECAUTIONS: None.

SECTION 15: REGULATORY INFORMATION

OTHER REGULATORY CONSIDERATIONS: None recognized.

SECTION 16: OTHER INFORMATION

PREPARATION DATE: 11/1/2019
PREPARED BY: Dave Carey

The information contained herein is based on the data available to us and is believed to be correct. However, we make no warranty, expressed or implied regarding the accuracy of this data or the results to be obtained from the use thereof. We assume no responsibility for injury from the use of this product described herein.

SAFETY DATA SHEET

SECTION 1: PRODUCT AND COMPANY IDENTIFICATION

Product: VOCOMP®-20 **Part Number:** 3420000
Manufacturer: W. R. MEADOWS, INC. **Address:** 300 Industrial Drive, Hampshire, Illinois 60140
Telephone: (847) 214-2100 In case of emergency, dial (800) 424-9300 (CHEMTREC)
Revision Date: 3/26/2020
Product Use: Concrete Curing/Sealing Compound

SECTION 2: HAZARDS IDENTIFICATION/EXPOSURE LIMITS

HMIS		HAZARD STATEMENTS
|Health|	|1|	**WARNING!**
|Flammability|	|0|	Causes skin irritation.
|Reactivity|	|0|	**PRECAUTIONARY STATEMENTS**
|Personal Protection|	| |	Avoid direct contact.

SECTION 3: HAZARDS COMPONENTS

Chemical Name:	CAS Number	% by Weight	SARA 313	Vapor Pressure (mm Hg@20°C)	LEL (@25°C)
1. Propylene Glycol Phenyl Ether	770-35-4	1-5	No	< 1	0.8

Under the reporting requirements of Section 313 of Title III of the Superfund Amendments and Reauthorization Act of 1966 (SARA) and 40 CFR Part 372, chemicals listed on the 313 List (40 CFR Part 373.65) are identified under the heading "SARA 313."

SECTION 4: EMERGENCY AND FIRST AID PROCEDURES

EYE CONTACT: Flush eyes with water for fifteen (15) minutes. If symptoms persist, seek medical attention.
SKIN CONTACT: Wash affected areas with mild soap and water. Remove contaminated shoes/clothing. If symptoms persist, seek medical attention.
INHALATION: Not expected to be an exposure route as supplied. If respiratory symptoms develop, seek medical attention.
INGESTION: Dilute with liquid unless the victim is unconscious or very drowsy. Do not induce vomiting. If vomiting, spontaneously occurs, prevent lung aspiration. Seek immediate medical attention.
MOST IMPORTANT SYMPTOMS/EFFECTS, ACUTE AND CHRONIC: See Section Eleven for Symptoms/Effects.

SECTION 5: FIRE AND EXPLOSIVES HAZARDS

FLASHPOINT: Product will not flash due to water content.
EXTINGUISHING MEDIA: Water fog, foam, dry chemical.
CHEMICAL/COMBUSTION HAZARDS: Carbon monoxide, carbon dioxide, and incomplete combustion products.
PRECAUTIONS/PERSONAL PROTECTIVE EQUIPMENT: Use appropriate personal protective equipment.

SECTION 6: ACCIDENTAL RELEASE MEASURES

SPILL OR LEAK PROCEDURES: Avoid direct contact. Dike and contain spilled material. Remove source of spill if safe to do so. Apply absorbent and place clean-up material in sealed/marked containers for proper disposal. Clean-up materials will be classified as non-hazardous waste.

SECTION 7: HANDLING AND STORAGE

SAFE HANDLING PROCEDURES: Avoid direct contact.
SAFE STORAGE: Prevent product from freezing.

SECTION 8: EXPOSURE CONTROLS/PERSONAL PROTECTION

	OSHA				ACGIH			
Chemical Name:	PEL	PEL/CEILING	PEL/STEL	SKIN	TWA	TLV/CEILING	TLV/STEL	SKIN
1. Propylene Glycol Phenyl Ether	N/E	N/E	N/E	No	N/E	N/E	N/E	N/E

N/E = Not Established

ENGINEERING CONTROLS: None required under normal use conditions.
PERSONAL PROTECTIVE EQUIPMENT: Safety glasses, chemical-resistant gloves.

SAFETY DATA SHEET

SECTION 9: PHYSICAL AND CHEMICAL PROPERTIES

BOILING POINT: 212 °F
EVAPORATION RATE: <1 (Ether=1)
WEIGHT PER GALLON: 8.46
ODOR: None
FLASH POINT: See Section 5
VAPOR PRESSURE: N/D
PARTITION COEFFICENT: N/D
VISCOSITY: N/D

VAPOR DENSITY: N/A
pH LEVEL: 9.4
PRODUCT APPEARANCE: Opaque Liquid
ODOR THRESHOLD: N/D
FLAMMABILITY: N/D
RELATIVE DENSITY: N/D
AUTOIGNITION TEMPERATURE: N/D

% VOLATILE BY VOLUME: N/E
% VOLATILE BY WEIGHT: 80
VOC CONTENT: 20 g/L
MELTING/FREEZING POINT: N/D
UEL/LEL: N/D
SOLUBILITY: N/D
DECOMPOSITION TEMPERATURE: *N/D*

N/A = Not Applicable *N/D= Not Determined*

SECTION 10: STABILITY/REACTIVITY

STABILITY: Stable.
HAZARDOUS POLYMERIZATION: Will not occur.
CONDITIONS AND MATERIALS TO AVOID: None recognized.
HAZARDOUS DECOMPOSITION PRODUCTS: None recognized.

SECTION 11: TOXICOLOGICAL INFORMATION

EYE CONTACT: Direct contact may cause mild to moderate irritation.
SKIN CONTACT: Direct contact may cause slight skin irritation. Prolonged/repeated contact may result in irritation.
INHALATION: Not anticipated to be an exposure route.
INGESTION: Not anticipated to be an exposure route.
SIGNS AND SYMPTOMS: Symptoms of eye irritation include tearing, reddening, and swelling. Symptoms of skin irritation include redness and swelling. Gastrointestinal irritation symptoms include nausea, vomiting, and abdominal discomfort. Symptoms of respiratory irritation include runny nose, sore throat, coughing, chest discomfort, shortness of breath, and reduced lung function.
AGGRAVATED MEDICAL CONDITIONS: Pre-existing skin, eye, and respiratory disorders may be aggravated by exposure to this product.
OTHER HEALTH EFFECTS: None recognized.

SECTION 12: ECOLOGICAL INFORMATION

ECOTOXICITY: N/E
DEGRADABILITY: N/E
BIOACCUMULATIVE POTENTIAL: N/E
SOIL MOBILITY: N/E
OTHER ADVERSE EFFECTS: None Recognized

SECTION 13: WASTE DISPOSAL INFORMATION

WASTE DISPOSAL INFORMATION: Solidified product can be landfill disposed. No free liquids.

SECTION 14: TRANSPORTATION INFORMATION

HAZARDOUS/NON-HAZARDOUS MATERIAL: Not regulated by DOT.
UN NUMBER: None.
HAZARD CLASS: N/A
PACKING GROUP: N/A
UN PROPER SHIPPING NAME: N/A
ENVIRONMENTAL HAZARDS: None recognized.
BULK TRANSPORTATION INFORMATION: None.
SPECIAL PRECAUTIONS: Prevent product from freezing.

SECTION 15: REGULATORY INFORMATION

OTHER REGULATORY CONSIDERATIONS: None recognized.

SECTION 16: OTHER INFORMATION

PREPARATION DATE: 3/26/2020
PREPARED BY: Dave Carey

The information contained herein is based on the data available to us and is believed to be correct. However, we make no warranty, expressed or implied regarding the accuracy of this data or the results to be obtained from the use thereof. We assume no responsibility for injury from the use of this product described herein.